Wire Antennas for Ham Radio

Iulian Rosu YO3DAC / VA3IUL, http://www.qsl.net/va3iul

***Note:** Dimensions of the antennas presented below are either in: feet ('), inch ("), meters (m), or centimeters (cm)*

01 - Tee Antenna
02 - Half-Lamda Tee Antenna
03 - Twin-Led Marconi Antenna
04 - Swallow-Tail Antenna
05 - Random Length Radiator Wire Antenna
06 - Windom Antenna
07 - Windom Antenna - Feed with coax cable
08 - Quarter Wavelength Vertical Antenna
09 - Folded Marconi Tee Antenna
10 - Zeppelin Antenna
11 - EWE Antenna
12 - Dipole Antenna - Balun
13 - Multiband Dipole Antenna
14 - Inverted-Vee Antenna
15 - Sloping Dipole Antenna
16 - Vertical Dipole
17 - Delta Fed Dipole Antenna
18 - Bow-Tie Dipole Antenna
19 - Bow-Tie Folded Dipole Antenna for RX
20 - Multiband Tuned Doublet Antenna
21 - G5RV Antenna
22 - Wideband Dipole Antenna
23 - Wideband Dipole for Receiving
24 - Tilted Folded Dipole Antenna
25 - Right Angle Marconi Antenna
26 - Linearly Loaded Tee Antenna
27 - Reduced Size Dipole Antenna
28 - Doublet Dipole Antenna
29 - Delta Loop Antenna
30 - Half Delta Loop Antenna
31 - Collinear Franklin Antenna
32 - Four Element Broadside Antenna
33 - The Lazy-H Array Antenna
34 - Sterba Curtain Array Antenna
35 - T-L DX Antenna
36 - 1.9 MHz Full-wave Loop Antenna
37 - Multi-Band Portable Antenna
38 - Off-center-fed Full-wave Doublet Antenna
39 - Terminated Sloper Antenna
40 - Double Extended Zepp Antenna
41 - TCFTFD Dipole Antenna
42 - Vee-Sloper Antenna
43 - Rhombic Inverted-Vee Antenna
44 - Counterpoise Longwire
45 - Bisquare Loop Antenna
46 - Piggyback Antenna for 10m
47 - Vertical Sleeve Antenna for 10m
48 - Double Windom Antenna
49 - Double Windom for 9 Bands
50 - Collinear Trap Antenna
51 - Short Dipole Antenna for 40m - 80m - 160m
52 - Center Fed-Zepp Antenna for 80m - 40m
53 - All Bands Antenna
54 - All-Bands Dipole Antenna
55 - Multiband Z Antenna
56 - Multiband Dipole Antenna
57 - Five-Bands No-Tuner Antenna
58 - Dualband Full-wave Loop Antenna for 80m-40m
59 - Loop Antenna for 10m
60 - Lazy Quad Antenna for 10m
61 - Tri-band Delta Loop Antenna for 80m - 40m - 30m
200 - Inverted-V Beam Antenna for 30m
201 - FD4 Windom Antenna for 80m, 40m, 20m, 10m
202 - Two Elements Phased Delta Loop for 40m
203 - Three Elements Wire Yagi for 10m
204 - Low Radiation Angle Full-Wave Loop Antenna for 80m
205 - Collinear Antenna Gain=3dB for 2m
206 - X-Ray Monoband Antenna Gain=6.5dBd
207 - Broadside Collinear Curtain Array for 20m
208 - Shrunk Loop Antenna for 80m, 40m
209 - λ/3 Multiband Dipole for 40m, 20m, 17m, 15m, 13m, 10m
210 - K3LR Sloper Antenna Gain=3dB for 160m
211 - Mini Folded Vertical Monopole Antenna for 160m, 80m, 40m
212 - Three Band Dipole for 80m, 40m, 20m
213 - Stub Matched Dipole Antenna
214 - Inverted-Vee Antenna with Bazooka Match
215 - Multiband Long Wire Antenna for 40m, 20m, 15m, 10m
216 - Converted Vee Antenna for 80m, 40m
217 - Swiss Quad Antenna for 20m, 15m, 10m
218 - Japanese Quad Antenna for 20m, 15m, 10m
219 - Seven-Elements Triangle Beam Antenna for 20m
220 - Log Periodic Wire Antenna for 40m
221 - Three-Elements 90-degrees Wire Beam for 20m
222 - Two-Elements Wire Beam for 20m
223 - Suitcase-Fit Dipole Antenna for 80m, 40m, 20m
224 - Multiband Coaxial Dipole for 80m, 40m
225 - Vertical Log Periodic Antenna for 80m, 40m
226 - Inverted Vertical Log Periodic Antenna for 40m
227 - Double Extended Zepp Antenna Gain=7dB for 15m
228 - Double Lazy-H Antenna G=10dB for 70cm
229 - Wire Log Periodic Antenna G=12dB for 15m, 20m
230 - Five-Elements Vertical Log Periodic for 80m, 40m, 20m
231 - Sloping Delta Loop Antenna for 40m
232 - Doublet Antenna for 160m
233 - Log Periodic Wire Beam for 40m
234 - G3LDO Wire Beam Antenna for 20m, 15m, 10m
235 - Phased Delta Loop Array for 20m
236 - Dual Band V-dipole for 80m, 40m
237 - Collinear Array 5dB-Gain for 15m
238 - Two-Band Quad Loop Antenna 80m, 40m
239 - K7CW Quad Antenna
240 - Broadband Short Dipole for 80m
241 - Off-Center Fed Dipole for 40m, 20m, 10m
242 - Broadband Sloper Antenna for 80m
243 - Two-Frequency Dipole Antenna for 80m
244 - Top Loaded Vertical Antenna for 160m
245 - Two Loop Beam Antenna for 20m, 15m
246 - Corner-Fed Delta Loop Antenna for 80m, 40m, 20m
247 - Loaded Delta Loop Antenna for 40m, 20m
248 - Compact Size Dipole for 80m
249 - JAWS 3dB Gain Antenna for 40m
250 - Inverted-V Antenna for 160m
251 - Lazy-U Antenna for 160m
252 - AF3V Compact Antenna for 160m
253 - Hot Beam Wire Antenna for 40m
254 - Sloping Delta Loop for 40m
255 - K6FD Multiband Antenna with T-tuner
256 - Dual Band Dipole Antenna for 17m, 10m
257 - Compact Travel Dipole Antenna for 10m, 15m, 20m
258 - End-Fire Antenna for 160m, 80m, 40m, 20m
259 - Four Band Loop for 40m, 20m, 15m, 10m
260 - Carolina Windom Antenna for 80 to 10m

62 - Dual-band Loop Antenna for 30m - 40m
63 - Wire-Beam Antenna for 80m
64 - Dual-Band Sloper Antenna
65 - Inverted-V Beam Antenna for 30m
66 - ZL-Special Beam Antenna for 15m
67 - Half-Sloper Antenna for 160m
68 - Two-Bands Half Sloper for 80m - 40m
69 - Linear Loaded Sloper Antenna for 160m
70 - Super-Sloper Antenna
71 - Tower Pole as a Vertical Antenna for 80m
72 - Clothesline Antenna
73 - Curtain Zepp Antenna for 160m, 80m, 40m
74 - Collinear Array Antenna for 40m, 30m, 20m
75 - 160m Inverted Delta Loop
76 - Half Rhombic Unidirectional Vertical for 20m to 6m
77 - Capacitance Loaded Vertical Antenna for 160m
78 - Fan Dipole Antenna for 80m to 6m
79 - Wire Ground Plane Antenna
80 - Inverted Delta Loop Antenna for 160m
81 - Inverted-L for 160m
82 - 300ohm-Ribbon Dual Band Dipole
83 - Tri-Band Beam for 20m, 15m, 10m
84 - Mini-Horse Yagi Antenna
85 - Backpack J-Pole Antenna for 10m, 6m, 2m
86 - Fan-Dipole Antenna for 80m, 40m, 20m
87 - Capacity Tuned Folded Loop Antenna for 20m
88 - Indoor Loop Antenna for 80m to 30m
89 - Indoor Loop Antenna for 80m
90 - Double-Delta Antenna 80m and 40m
91 - Inductance-Loaded Shortened Dipole for 160m
92 - V-Beam Antenna for 15m
93 - Picnic Vertical Wire Antenna
94 - Laid-Back Quad Antenna for 80m
95 - Phased Loop Antenna
96 - Loop Antenna for TX for 160m
97 - Morgain-Dipole Antenna for 160m and 80m
98 - ZL-Special for 20m, 15m, 10m
99 - Biconical Antenna
100 - Directive Delta-Birdcage Antenna for 20m to 10m
101 - Dual Polarization Antenna for 80m and 40m
102 - Directive 300-ohm-Ribbon Folded Dipole for 15m
103 - Miniature Directive Antenna for 10m
104 - Biquad Antenna 12dBi-Gain for 2.4GHz
105 - Dual-Rhomboid Antenna for 435MHz to 870MHz
106 - Double-Bazooka Antenna for 80m
107 - J-Style Antenna
108 - Vertical / Horizontal / Circular Polarization Antenna
109 - Coax Inverted-L Antenna for 80m
110 - Indoor Compact Loop Antenna for 80m
111 - Helix Antenna
112 - Novice Vertical Antenna for 80m, 40m, 15m, 10m
113 - Stub-Loaded Shortened Dipole for 80m
114 - Six-Band Wire-Stub Trap Antenna for 40m-10m
115 - Multiband Half-Wave Delta-Loop Antenna
116 - Hybrid Vee for 20m, 17m
117 - Six-Shooter Array Antenna, Gain=7.5dB
118 - Multiband Ground-Plane Antenna for 10m, 15m, 20m
119 - Wire Superbeam Antenna for 10m, 15m, 20m
120 - Two Elements Delta-Loop Antenna
121 - Sterba Curtain Antenna
122 - Half-Wave Vertical Zepp Antenna
123 - Lazy-Loop Antenna for 40m
124 - Terminated Folded Dipole for 80m, 40m
125 - Short-Fat Antenna for 15m
126 - Cobra Antenna for 80m
127 - Log-Periodic Wire Antenna for 20m, 15m, 10m
261 - Shortened Loaded Dipole for 40m
262 - Shortened Loaded Dipole for 80m
263 - Low Radiation Angle Inverted Delta Loop for 80m
264 - Compact Dipole Antenna for 40m, 15m
265 - Vertical Delta Loop for 40m to 10m
266 - Delta Loop Antenna for 17m
267 - Bi-Square Beam Gain=3dBd for 17m
268 -Trap Dipole Antenna for 17m,13m
269 - Hanging Unipole Antenna for 160m, 80m
270 - Wideband Sloping Vee Antenna - 30m to 6m
271 - 5/8 Wavelength Antenna
272 - C-Pole Vertical Antenna
273 - Bobtail Antenna for 30m
274 - Bobtail Antenna for 40m
275 - Two Elements Vertical Loop Antenna for 40m
276 - Double Extended Zepp Antenna for 40m
277 - Reversible Moxon Flip Beam for 40m
278 - Spitwire Antenna for 40m
279 - Fork Antenna for 40m
280 - Veebeam Antenna 3dB-Gain for All Bands
281 - Vertical Moxon Antenna for 10m
282 - Half-Square Antenna for 30m
283 - Rotatable Vertical Delta Loop for 20m
284 - Mini-Horse Antenna 10dB-Gain for 40m-to-2m
285 - Compact Moxon Antenna 5dB-Gain for 40m
286 - Two Elements Sloping Delta Loop 8dB-Gain for 10m
287 - Two Elements Phased Vertical Antenna 3dB-Gain for 40m
288 - Bird Yagi Wire Antenna G4ZU for 10m
289 - Sardine Tin Opener (STO) Antenna for 160m,80m,40m
290 - Vertical Phased Endfire Antenna for 80m
291 - Vertical Broadside Array for 80m
292 - Dual-Band Crossed Dipole Antenna for 40m, 20m
293 - 2 element Vertical Delta Loop Beam for 15m,10m
294 - Folded Coaxial Dipole Antenna for 80m to 2m
295 - VK2ABQ Tribander 4dBd-Gain for 20m,15m,10m
296 - Folded Long-Wire Antenna for 40m
297 - Wine Bottle Vin-Plonk Antenna G2BZQ for 20m
298 - Guy-Wire Doublet Tri-Band Antenna for 10m,15m,20m
299 - Two-Element Vertical Delta Loop Beam Gain-4dB
300 - Novi-Loop Antenna
301 - K3BM Sloping Delta Loop Antenna for 160m
302 - Vertical Delta Loop GW7AVV for 4m
303 - Delta Mono-Loop Antenna DJ0IP for 40m
304 - Multiband Vertical Delta Loop M0PLK for 30m to 10m
305 - Inverted Dipole Delta Loop Antenna for 40m,80m,160m
306 - Two Element Wire Beam OK1ATP for 160m
307 - Quad Fixed Beam Antenna for 20m
308 - Open Loop RX Antenna for 160m
309 - Hybrid Multiband Antenna for 160m to 10m
310 - Long Wire Antenna GW0GHF for 6m
311 - Random Delta Loop KC8AON for 80m to 10m
312 - Broadband Butterfly Terminated Dipole KQ6XA for 80m to 10m
313 - Crossed Dipole Antenna for 23cm
314 - The Ultimate Eight Bander Antenna
315 - Simple DX Wire Antenna LA5UF
316 - Elongated Quad-Loop Antenna G3BDQ
317 - Bobtail-Curtain Antenna for 20m,40m
318 - Vertical Tee Antenna
319 - Three Versions of Wide Band Dipoles
320 - All HF Bands Loop Antenna GI2FHN
321 - Triangle Sloper 3dB-Gain G8PO for 160m,80m,40m
322 - Quad Window Antenna for 2m
323 - Hamtenna VK6VH for 80m
324 - Monopole Antenna Loaded with Folded Dipole for 23cm
325 - Lazy-H Antenna for 20m,17m,15m,12,10m
326 - Multee Antenna for 160m,80m,40m
327 - Marconi Ribbon Line Antenna for 80m

128 - 5-Element Log-Periodic Vertical Antenna for 80m, 40m, 20m
129 - 2m Vertical Wire Antennas
130 - Earth-Mover Inverted-V Antenna for 40m
131 - Coax-Cable Collinear Antennas
132 - Double Bobtail Antenna for 20m
133 - Collinear Zepp Antenna
134 - Taylor Vee Antenna for 20m
135 - Collinear Vertical Antenna 6dB-Gain for 2m, 1.3m, 73cm
136 - Bi-Loop Antenna for 20m
137 - Wire Beam 6dBd-Gain for 10m
138 - Sloping Diamond Antenna 4dB-Gain for 40m
139 - Twisted Loop Antenna for 160m
140 - DX RX Loop Antenna for 160m
141 - Hentenna 3dB-Gain for 10m, 6m, 2m
142 - VK2AAR Wire Antenna for 20m
143 - 2-Elements Quad Antenna for 6m
144 - Hula-Loop Bidirectional 6dB-Gain Antenna for 17m
145 - Moxon Rectangle Beam for 15m-10m
146 - Double-D Beam 4dB-Gain
147 - KE4PT OCEF All-Band Dipole
148 - Wire Quad Antenna for 40m
149 - Inclined Dipole Antenna for 80m, 40m
150 - Pyramidal Wire Antenna for 80m
151 - Random Wire Antenna All Bands
152 - Multiband Dipole Antenna for 80m, 40m,15m, 10m
153 - Slim Jim Wire Antenna for 4m
154 - Delta Loop for 6m
155 - Re-Configurable Antenna for 160m and 80m
156 - Very Low Frequency Inverted-L Antenna
157 - Reduced Size Half Sloper Antenna for 160m
158 - Tree-Mounted HF Antenna
159 - Multiband Vertical Antenna for 80m, 40m, 20m
160 - Marconi Antenna for 136 kHz
161 - Simple Killer Antenna for 40m
162 - Stub-Directed V Antenna for 80m
163 - KT0NY Over-and-Under DX Antenna for 20m
164 - Horizontal Loop Antennas
165 - Ribbon J-Pole for 2m
166 - Dual Band Ribbon J-Pole for 2m, 70cm
167 - Square Vertical Loop Antenna for 40m
168 - Tri-Band Quad Antenna for 20m, 15m, 10m
169 - 3D Quad Antenna for 80m, 40m, 20m, 15m, 10m
170 - Sloping Wire Antenna for 30m, 20m, 17m, 15m, 12m, 10m
171 - Broadband Dipole Antenna with Coaxial Resonator for 80m
172 - Resonant Feedline Dipole Antenna for 80m
173 - Dual-Band Loading Wire Antenna for 80m, 30m
174 - Stub Matching Antennas
175 - J-Style Vertical Wire Antenna for 10m
176 - Dual Band Vertical with Zepp Feeders for 40m, 20m
177 - RCA Double Doublet for 40m to 12m
178 - RCA Spiderweb Antenna for 40m to 6m
179 - Folded Dipole with Shorted Straps
180 - Twin-Lead Marconi Antenna for 160m, 80m
181 - Broadband Antenna Quarter-Wave Balun for 80m
182 - Three-Quarter-Wave Folded Doublet for Dual-Band
183 - Three-Quarter-Wave Folded Doublet No-Switch for Dual-Band
184 - Wideband Omni-Directional Discone Antenna
185 - Wideband Rhombic Antenna for 40m to 10m
186 - Pre-Cut Linear Array Antenna 3dB-Gain for 40m
187 - X-Array Antenna 6dB-Gain for 20m, 15m, 10m
188 - Double-Bruce Array Antenna 5dB-Gain for 20m, 10m
189 - Bi-Square Broadside Array 4dB-Gain for 20m, 15m, 10m
328 - WARC Tri-Band Antenna for 30m,17m,12m
329 - Two-Element Delta Loop Beam for 20m,10m
330 - Bidirectional Array Antenna W8JK for 20m to 10m
331 - High Gain Rhombic Antenna for 70cm
332 - Inverted Tree Delta Loop for 40m
333 - Triangular Multiband Loop Antenna for 80m to 10m
334-T-Antenna with Sloping Elements for 40m,20m
335 - Vertically Elongated Loop Antenna for 15m
336 - Short Helical Wound Dipole for 15m
337 - Quadplane Antenna
338 - Hibernating Directive Dipole for 20m
339 - H-Elongated V-Polarized Quadloop Antenna for 160m,80m,40m
340 - Dual Band λ/4 Sloper Antenna for 80m,40m
341 - Broadband Traveling-Wave Dipole for 80m to 10m
342 - Jaws Antenna for 40m
343 - Compact Double-D Antenna
344 - Portable Spiderbeam for 20m,15m,10m
345 - All Bands Cone Antenna
346 - Modified G5RV Antenna for 160m
347 - Vertically Polarized Multiband Antenna for 160m,80m,40m
348 - Half-Trap DX Antenna for 80m,40m
349 - WARC Bands Trapped Dipole for 80m,40m,30m,17m,12m
350 - T2FD Short Dipole Antenna for 80m,40m,20m
351 - Half Delta Loop Antenna VE2CV for 160m
352 - Grounded End-Fed Wire Antenna for 160m
353 - Folded Dipole Coax Feeding
354 - High Gain Rhombic Antenna
355 - Long Wire Antenna for 6m
356 - Kite Antennas
357 - Multiband Windom with Balun for 80m to 10m
358 - Portable Collinear Antenna GM3LBX for 2m
359 - Two-Elements Loaded Yagi for 20m
360 - Horizontal Plane TX Loop Antenna for 40m
361 - Long Wire Antenna W3RW for 10m,6m
362 - Tri-Band Wire Beam VK2ABQ for 20m,15m,10m
363 - Glen Forest Marconi Antenna for 80m,30m,17m,12m
364 - Broadband Inverted-V Antenna for 80m to 10m
365 - Broadband Terminated Delta Loop
366 - Skywire Loop Antenna for 80m,40m
367 - Rectangular Loop Antenna for 80m
368 - Mini Delta Beam GM3VLB for 20m,17m,21m,13m,10m
369 - End-Fed Inverted-Vee Beam
370 - Conical Vee with Balun for 40m,15m
371 - Vertical Delta Loop Antenna for 160m,80m
372 - Two Wire Resonant Rhombic Antenna for 20m,15,10m
373 - Inverted-Vee with Parasitic Reflector for 40m
374 - Acute Angle Inverted-Vee Antenna for 160m to 10m
375 - Open-Wire End-Fire Beam for 15m,10m
376 - Single Mast Two-Element Delta Loop for 40m
377 - Dual Band Turnstile Triangle Antenna for 80m,40m
378 - Three-Band Short Antenna for 160m,80m,40m
379 - Sloping-Vee Antenna for 80m to 6m
380 - Five DX Antennas for 30m
381 - T-Ant for 160m, 80m
382 - L-Ant for 160m, 80m
383 - Monoband Delta Loop for 40m
384 - Single-Band Wire Beam Antenna for 40m,20m,15m,10m
385 - Rhombic Beam Antenna for 80m, 40m
386 - Inverted-V Antenna for 80m, 40m, 30m
387 - Directive Delta Loop Antenna for 160m
388 - Simple Sloper DXA Antenna for 160m to 40m
389 - 2x Element Delta Loop for 12m
391 - Vertical Rhombic Antenna

190 - Six-Shooter Broadside Array 7.5dB-Gain for 20m, 15m, 10m
191 - Triplex Flat-Top Beam 4.5dB-Gain for 20m, 15m, 10m
192 - Dual-Band Tilt Antenna for 20m, 10m
193 - Super Space Multiband Dipole Antenna for 80m to 10m
194 - Bi-Square Beam Antenna Gain=5.5dB for 10m
195 - Cousin of G5RV Multiband Antenna for 40m to 10m
196 - Cayman Quad Antenna for 20m
197 - Hentenna Gain=3dB with Bazooka Match for 6m
198 - X-Beam Antenna Gain=3dB for 20m
199 - Twin Delta Loop Antenna Gain=6dB for 160m, 80m, 40m

01 - Tee Antenna

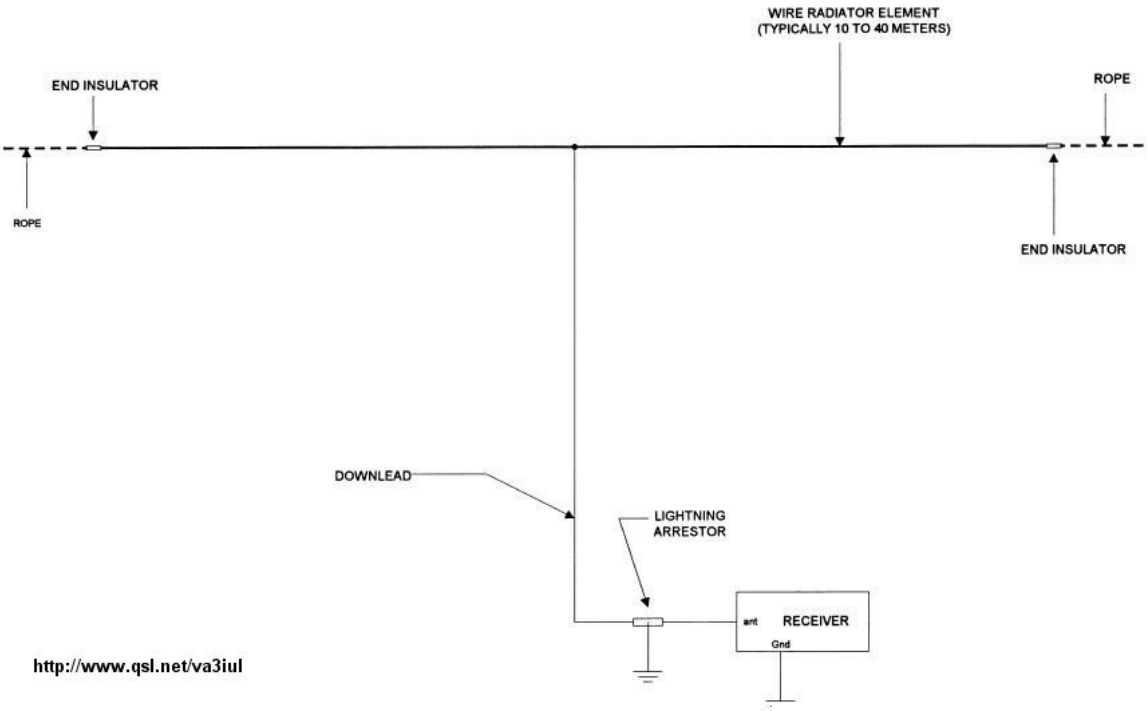

02 - Half-Lamda Tee Antenna

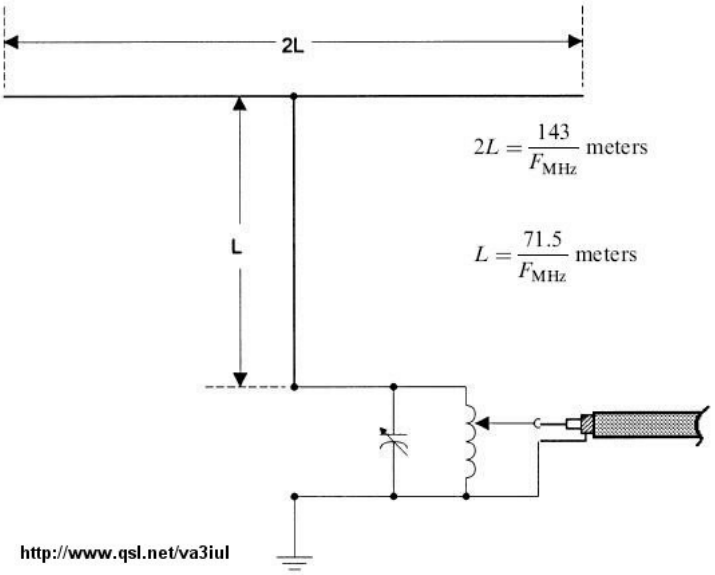

03 - Twin-Led Marconi Antenna

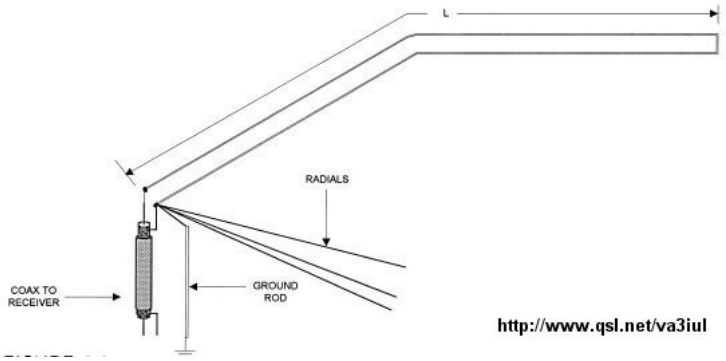

04 - Swallow-Tail Antenna

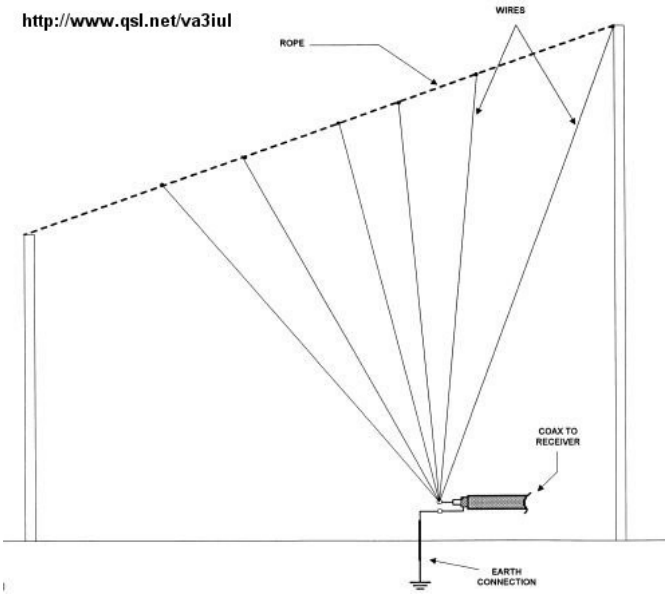

05 - Random Length Radiator Wire Antenna

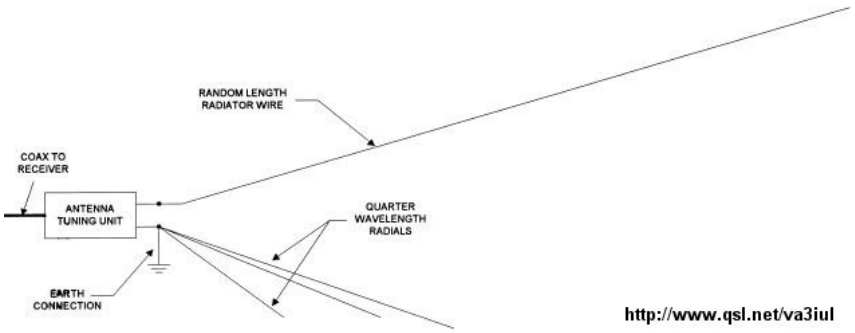

06 - Windom Antenna

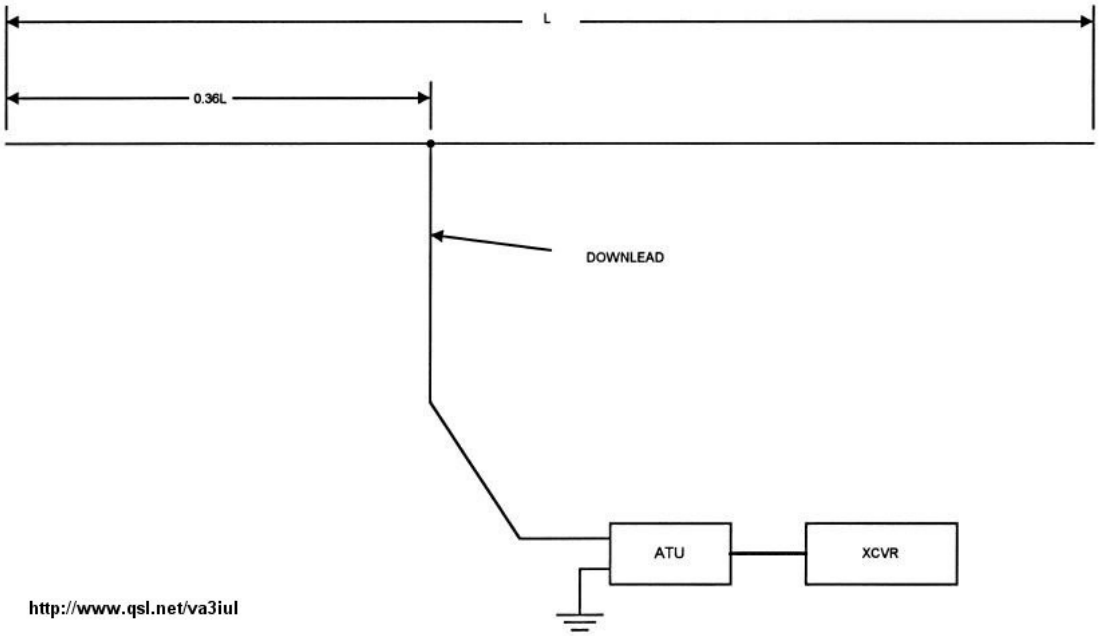

07 - Windom Antenna - Feed with coax cable

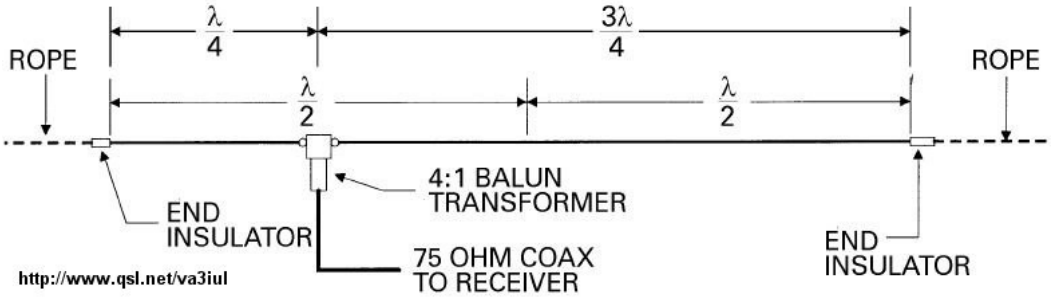

08 - Quarter Wavelength Vertical Antenna

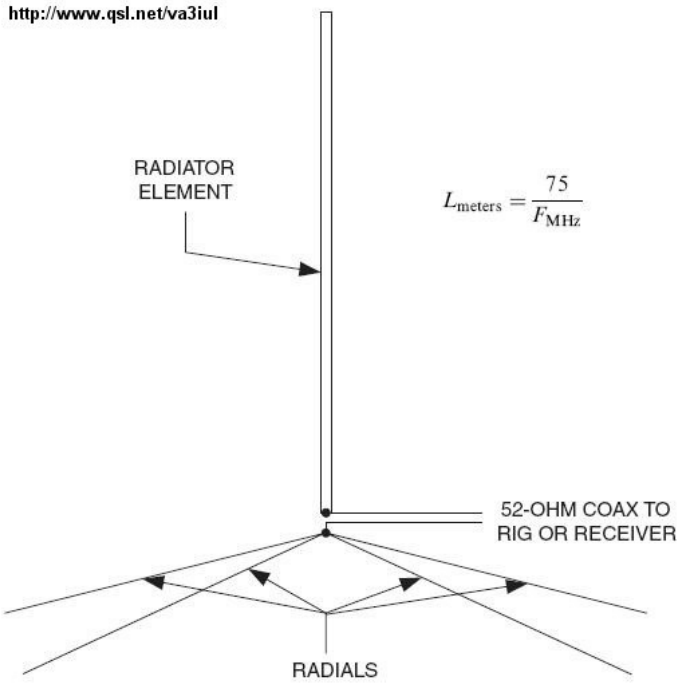

09 - Folded Marconi Tee Antenna

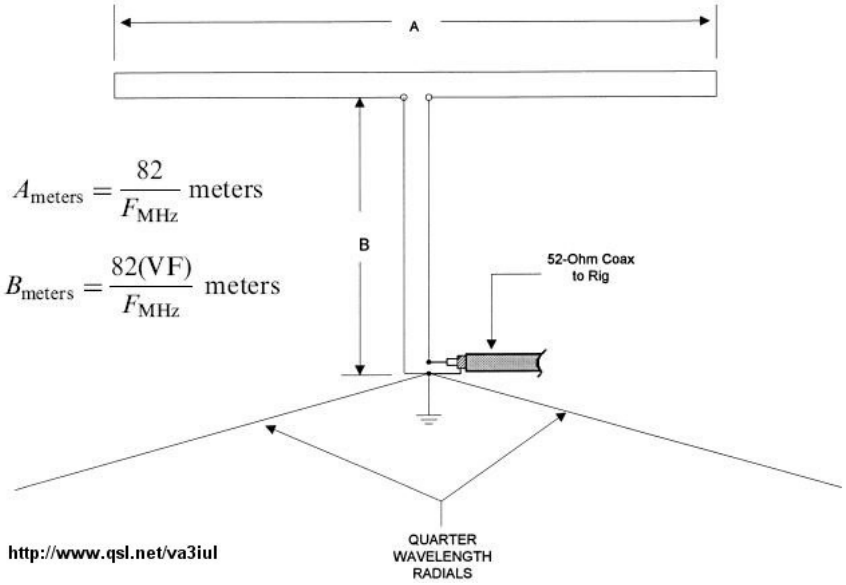

$$A_{\text{meters}} = \frac{82}{F_{\text{MHz}}} \text{ meters}$$

$$B_{\text{meters}} = \frac{82(\text{VF})}{F_{\text{MHz}}} \text{ meters}$$

10 - Zeppelin Antenna

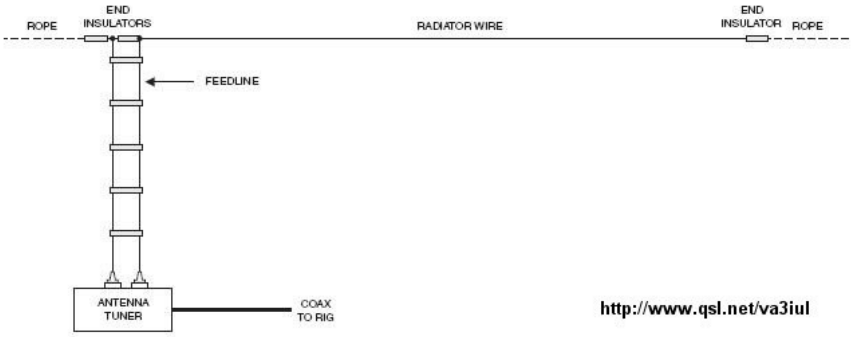

11 - EWE Antenna

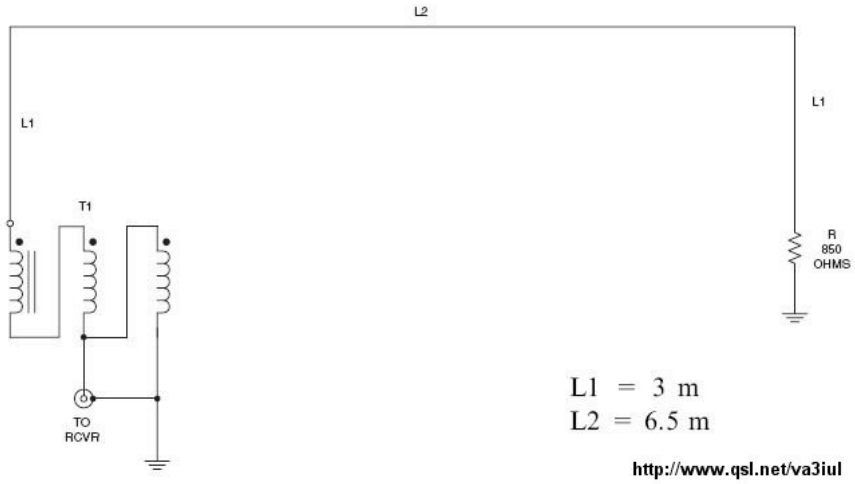

12 - Dipole Antenna - Balun

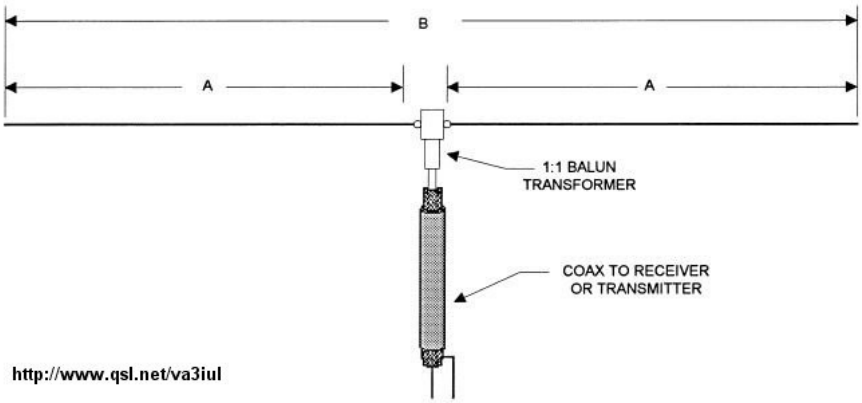

13 - Multiband Dipole Antenna

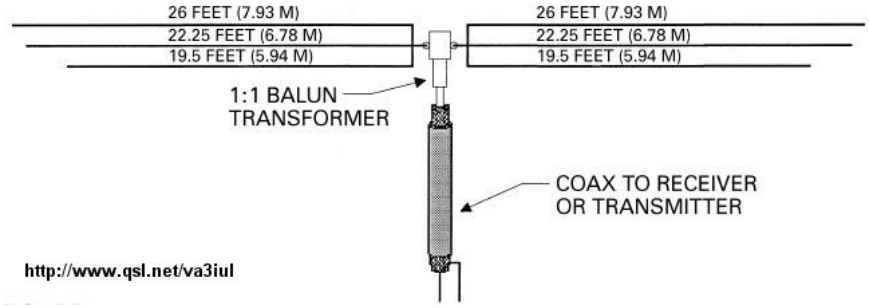

14 - Inverted-Vee Antenna

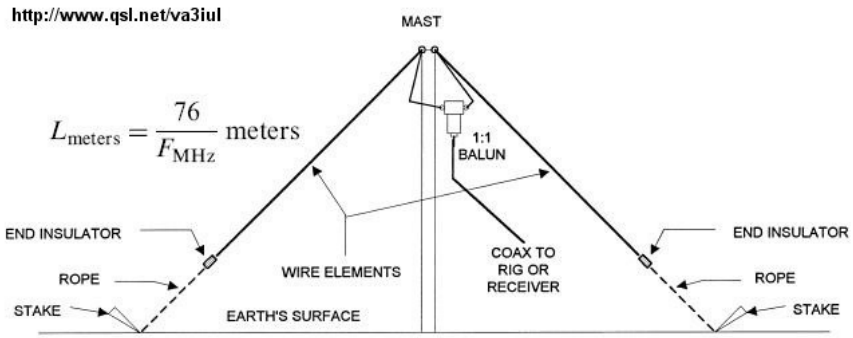

15 - Sloping Dipole Antenna

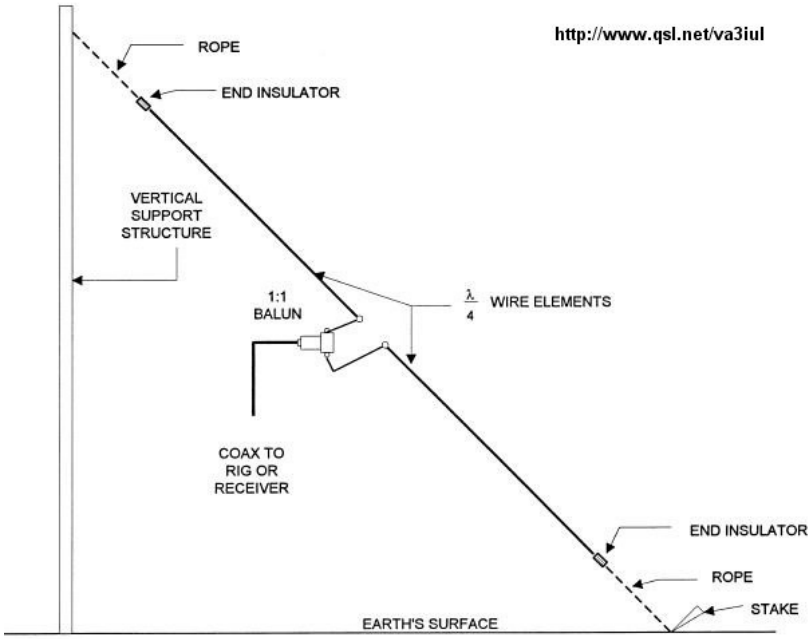

16 - Vertical Dipole

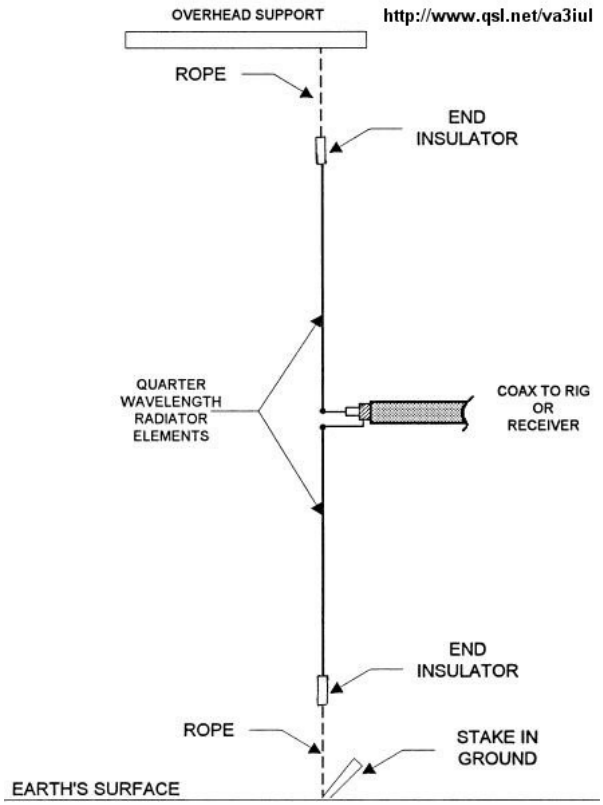

17 - Delta Fed Dipole Antenna

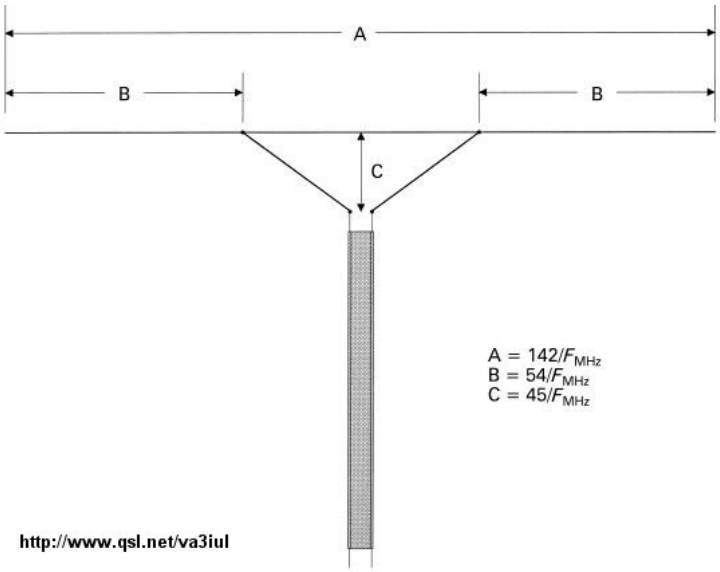

18 - Bow-Tie Dipole Antenna

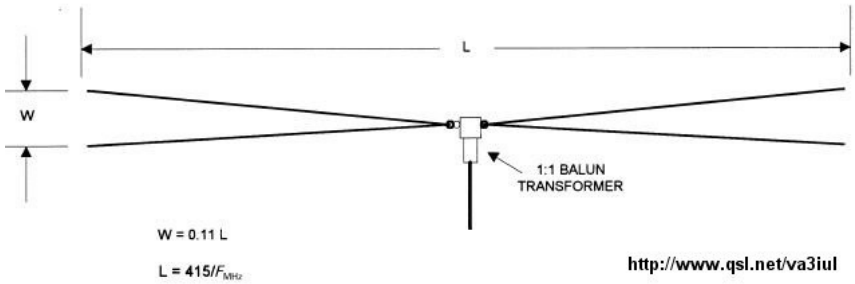

19 - Bow-Tie Folded Dipole Antenna for RX

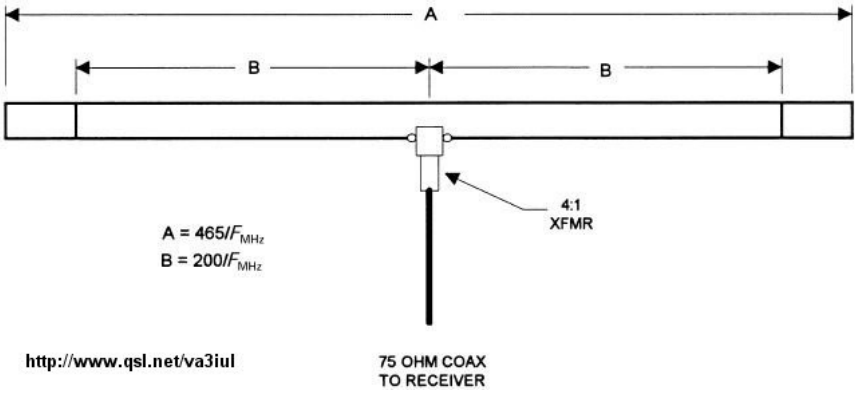

20 - Multiband Tuned Doublet Antenna

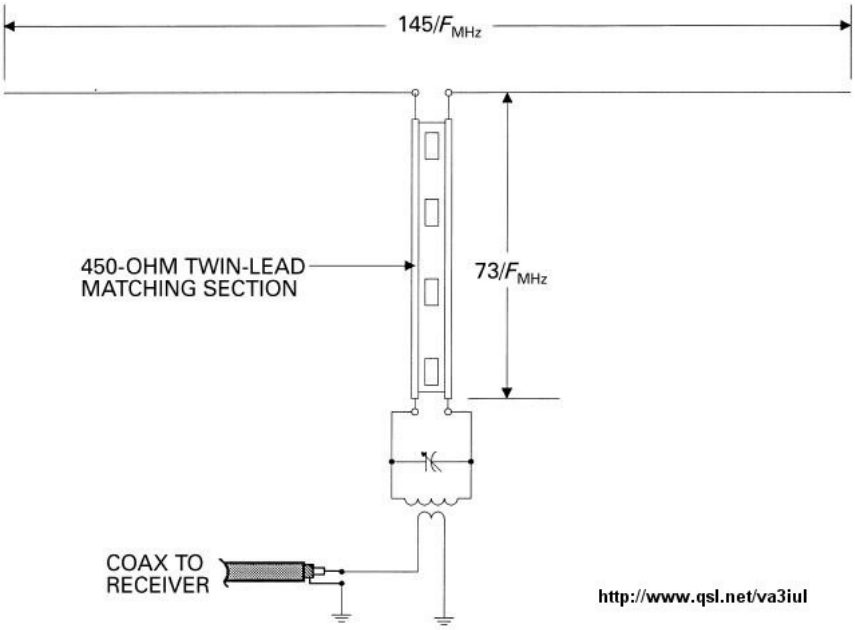

21 - G5RV Antenna

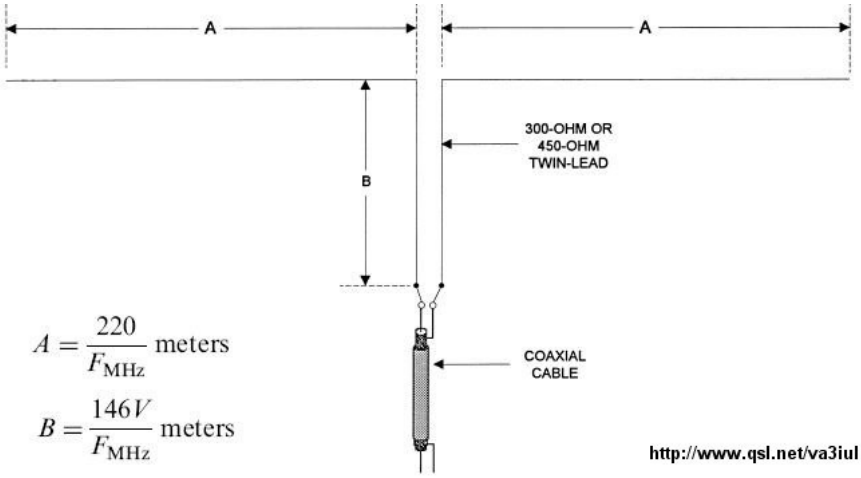

22 - Wideband Dipole Antenna

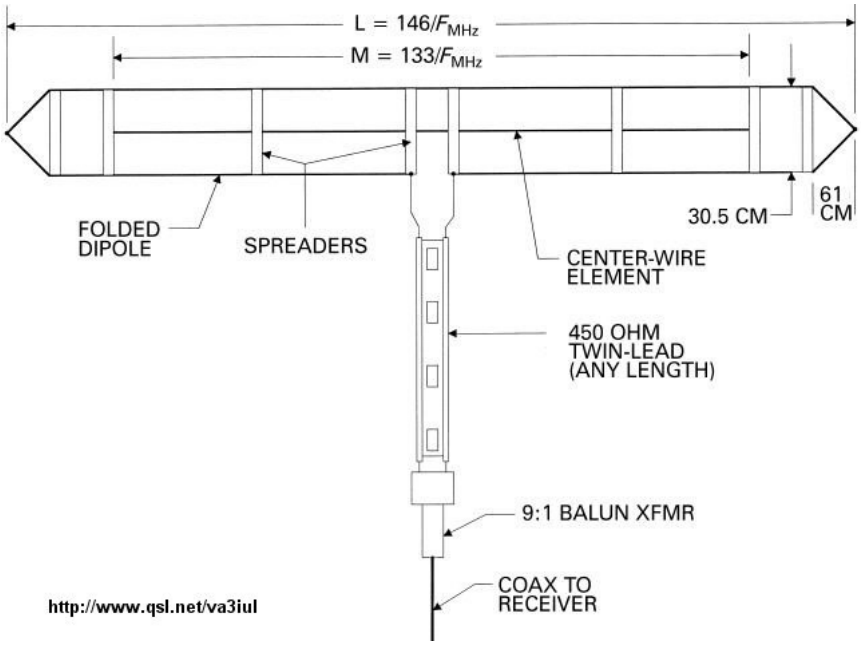

23 - Wideband Dipole for Receiving

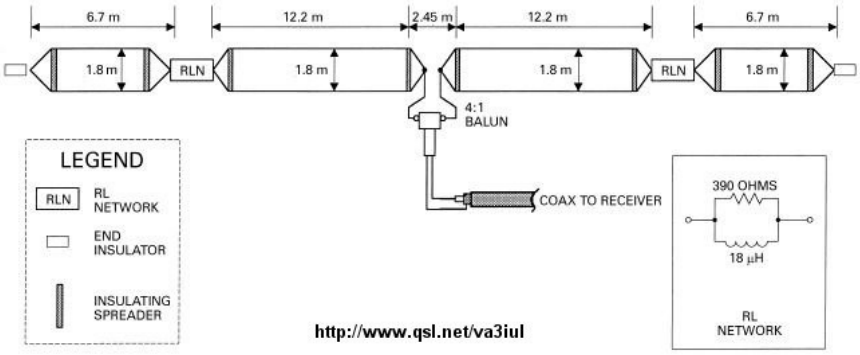

24 - Tilted Folded Dipole Antenna

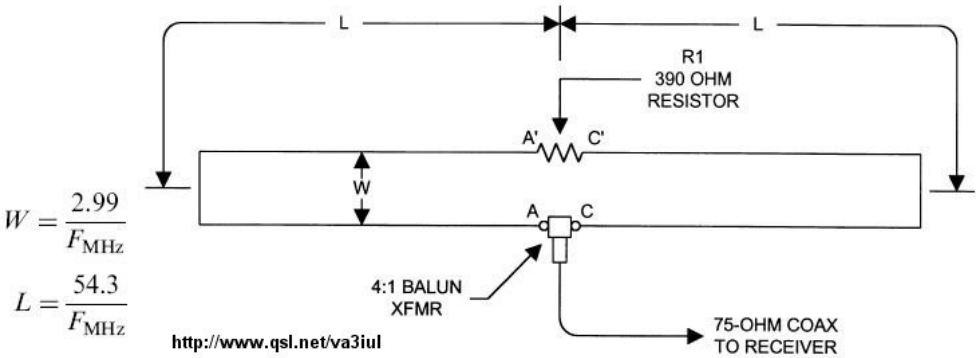

$$W = \frac{2.99}{F_{MHz}}$$

$$L = \frac{54.3}{F_{MHz}}$$

25 - Right Angle Marconi Antenna

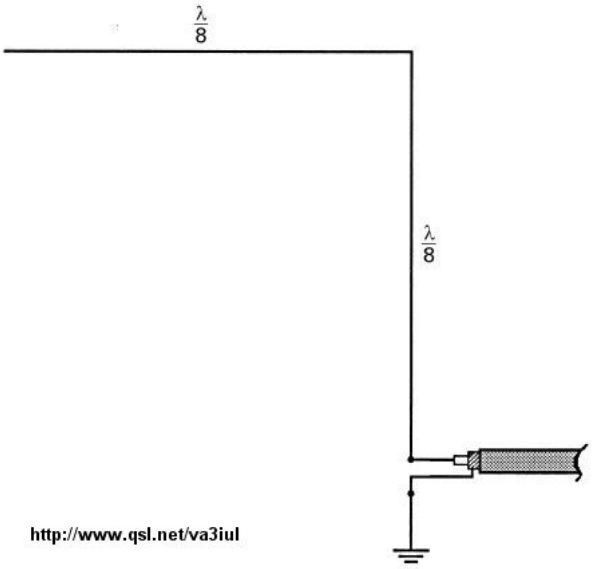

26 - Linearly Loaded Tee Antenna

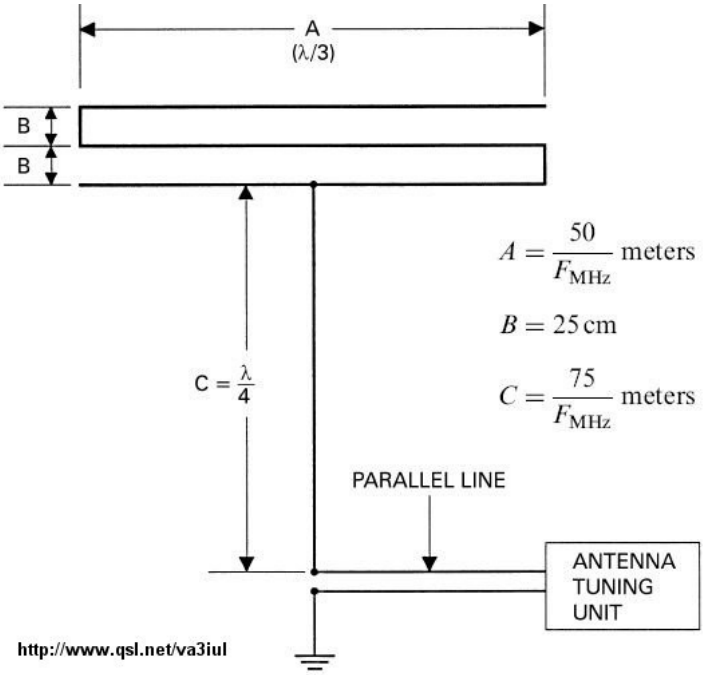

27 - Reduced Size Dipole Antenna

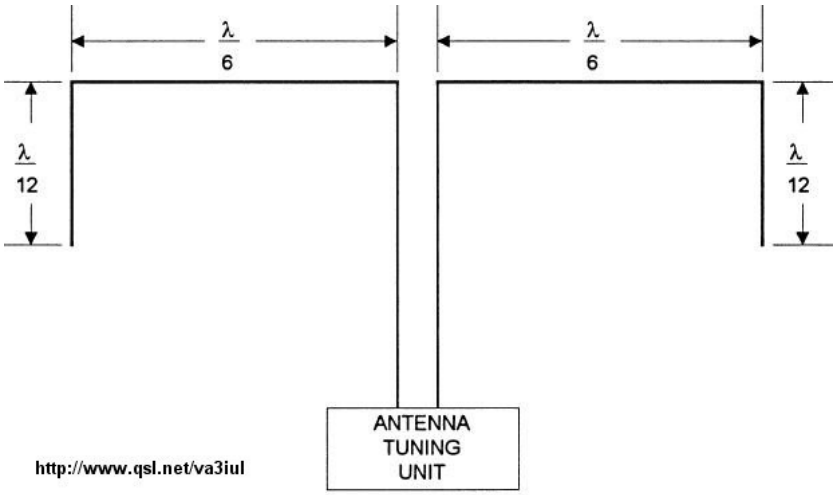

28 - Doublet Dipole Antenna

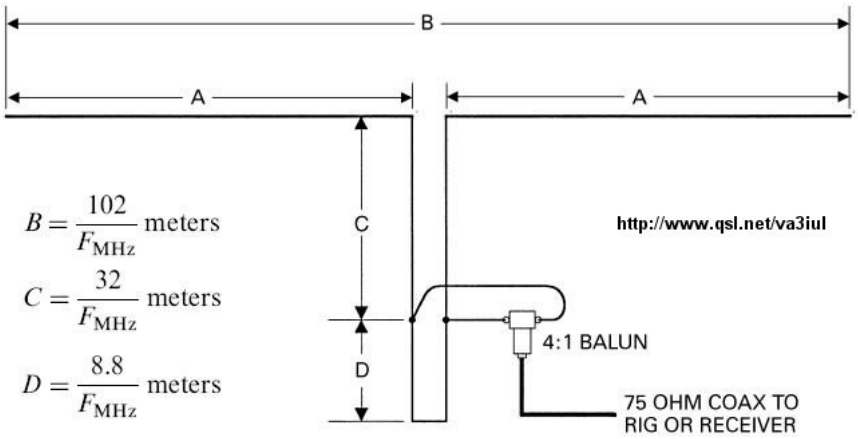

29 - Delta Loop Antenna

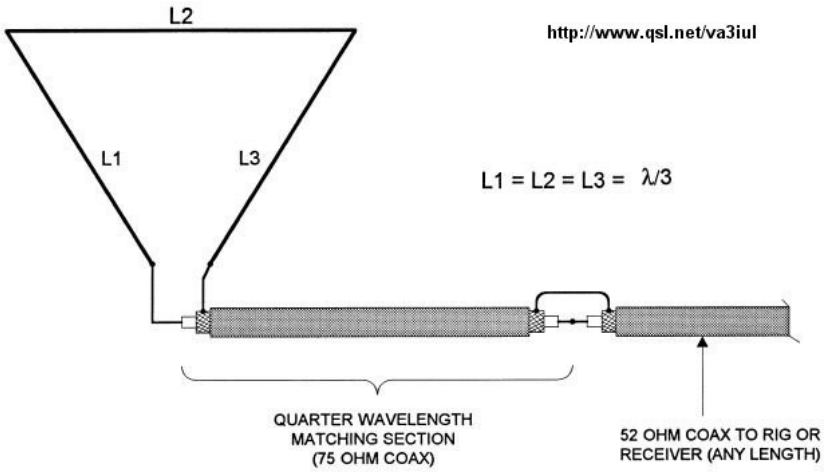

30 - Half Delta Loop Antenna

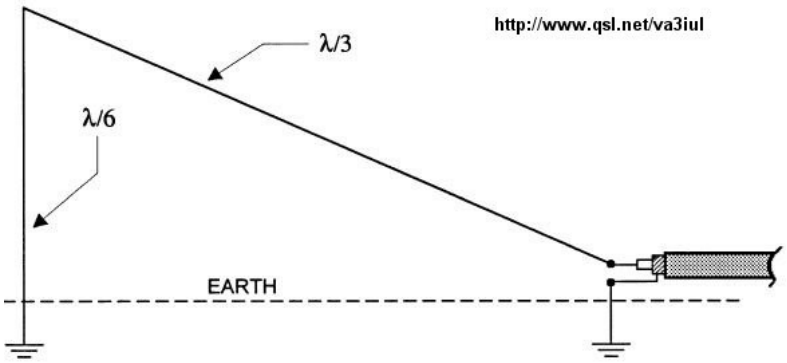

31 - Collinear Franklin Antenna

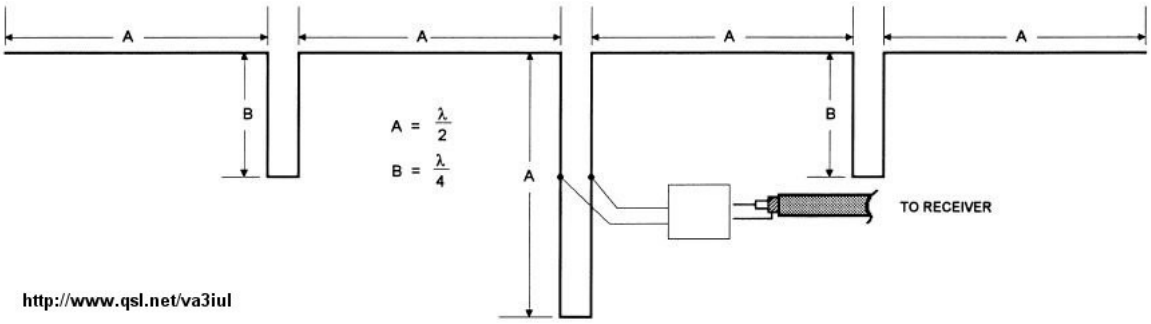

32 - Four Element Broadside Antenna

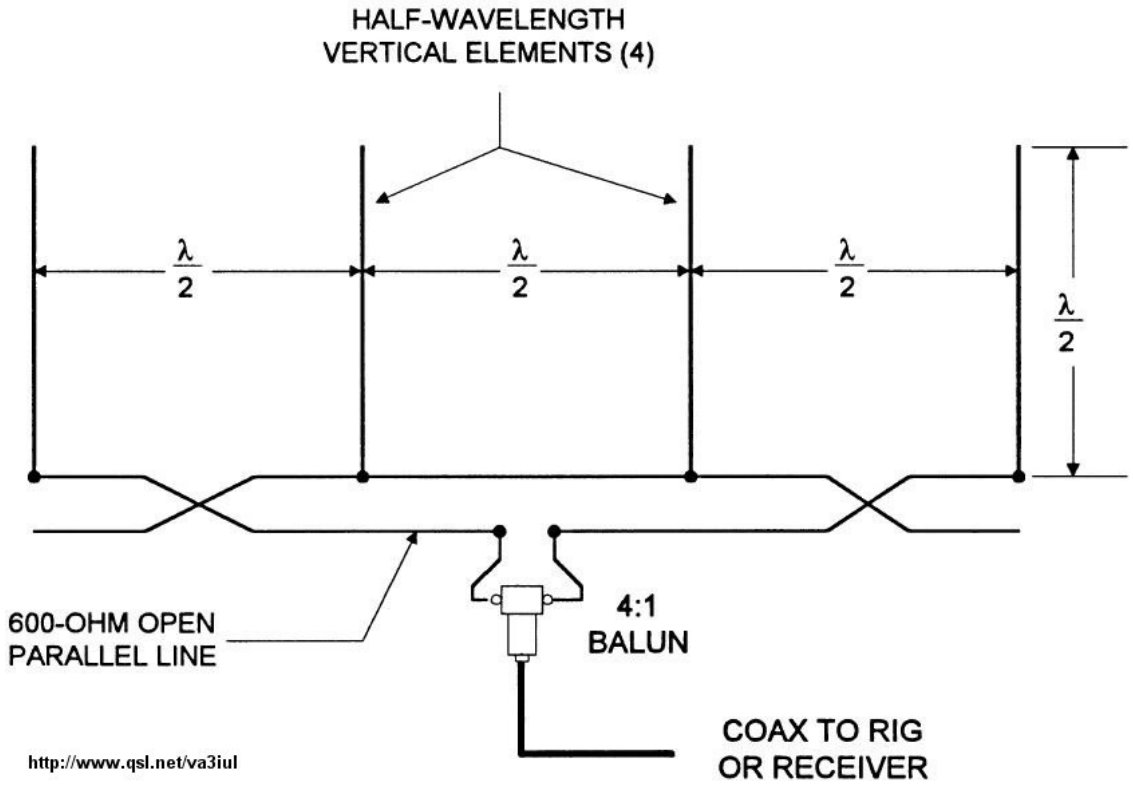

33 - The Lazy-H Array Antenna

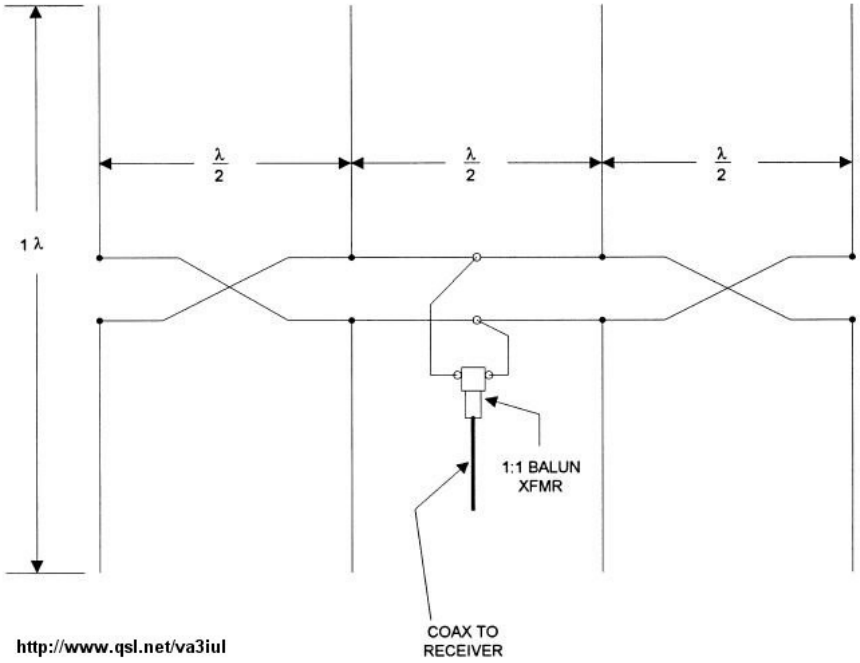

34 - Sterba Curtain Array Antenna

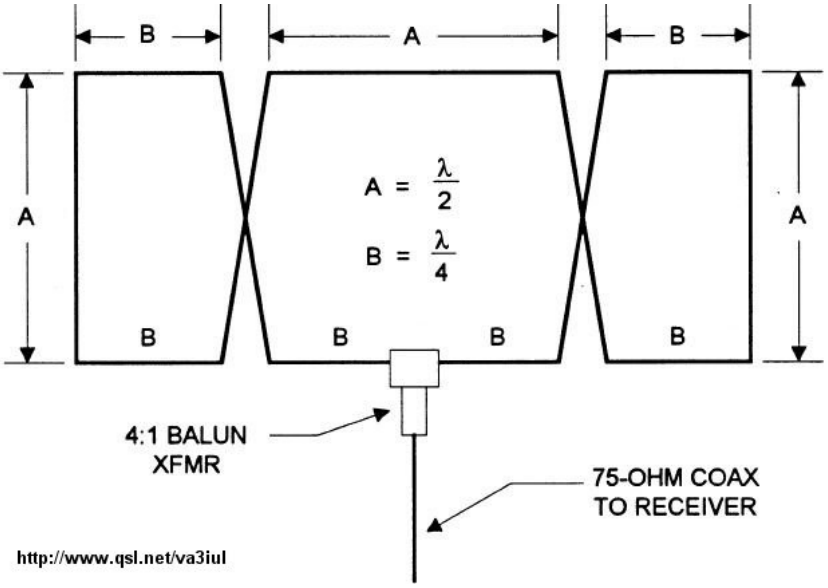

35 - T-L DX Antenna

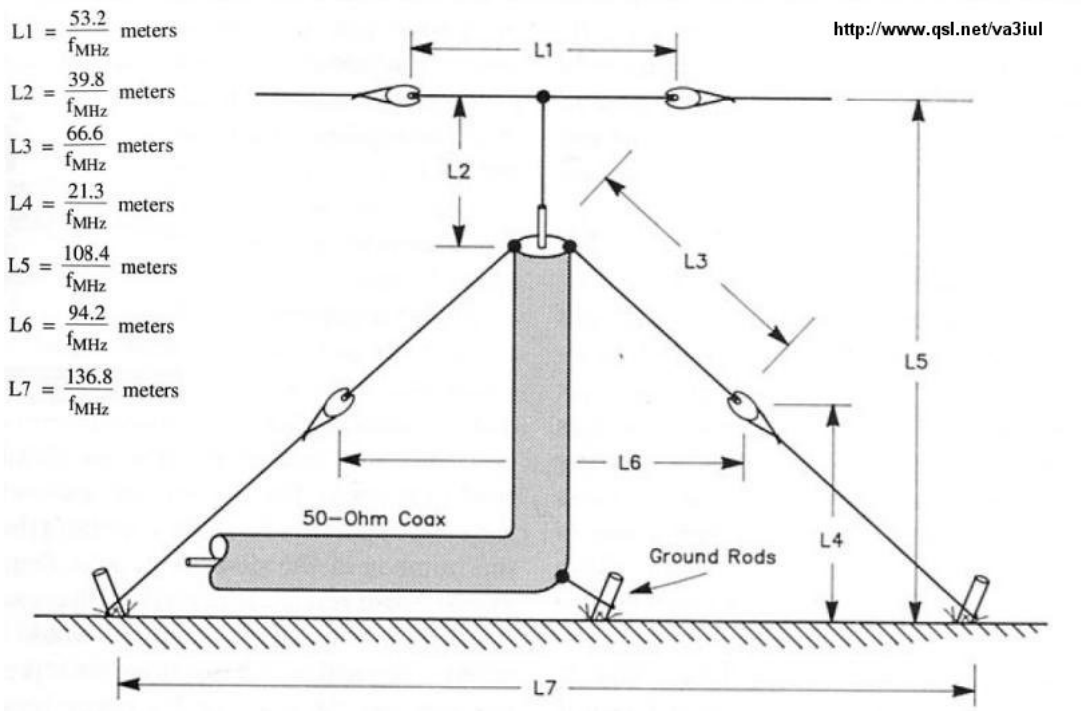

36 - 1.9 MHz Full-wave Loop Antenna

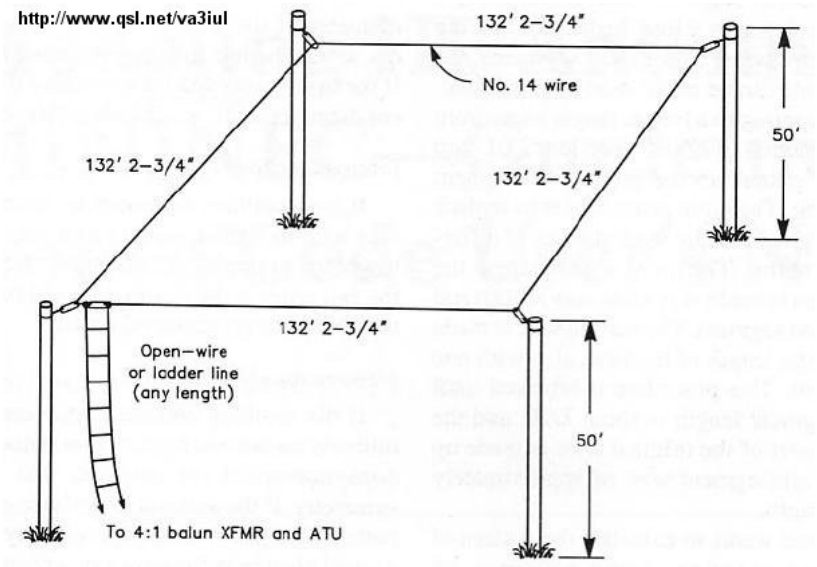

37 - Multi-Band Portable Antenna

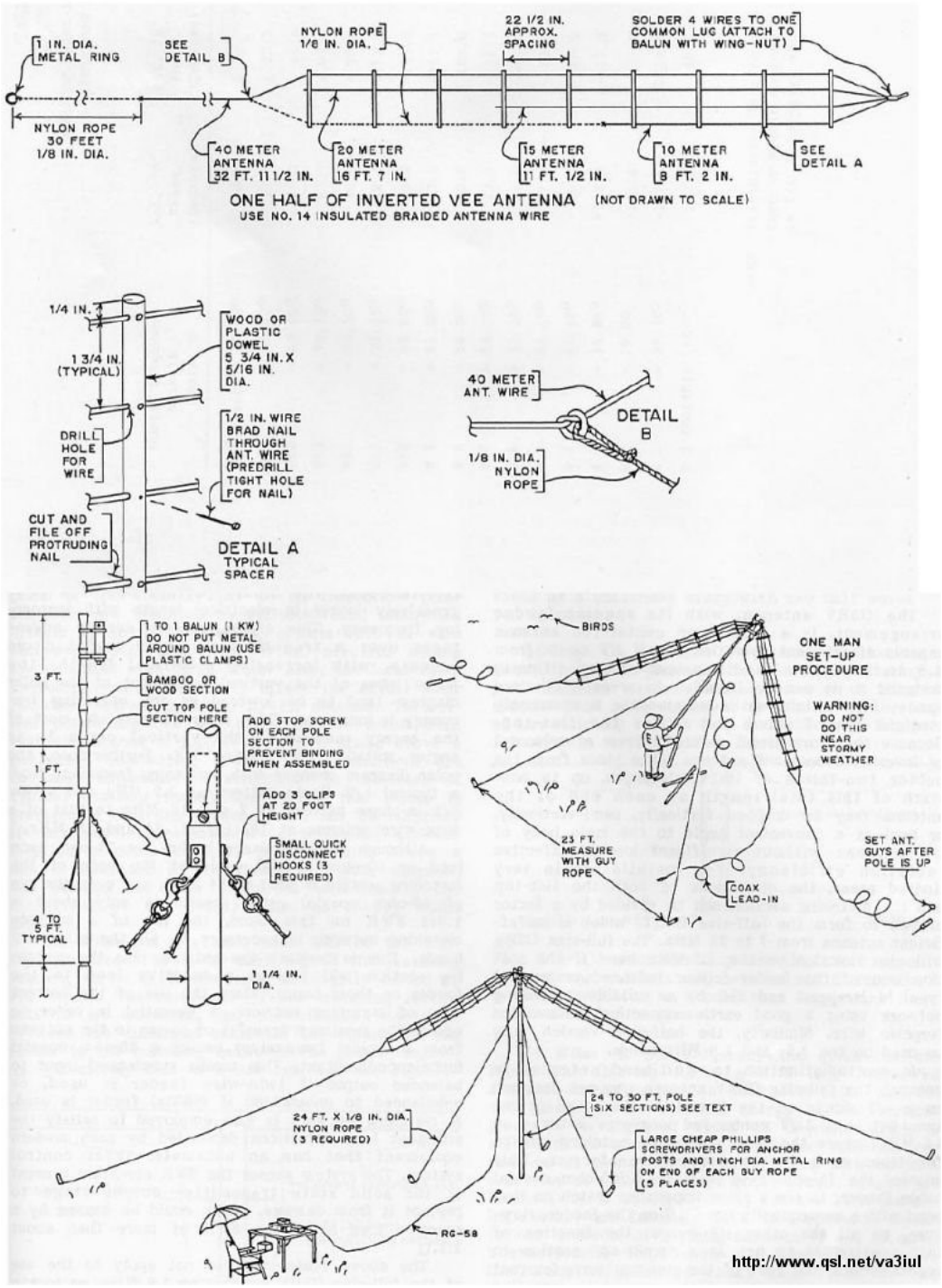

38 - Off-center-fed Full-wave Doublet Antenna

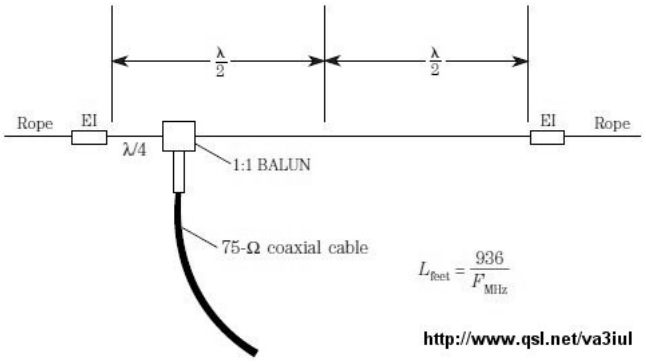

39 - Terminated Sloper Antenna

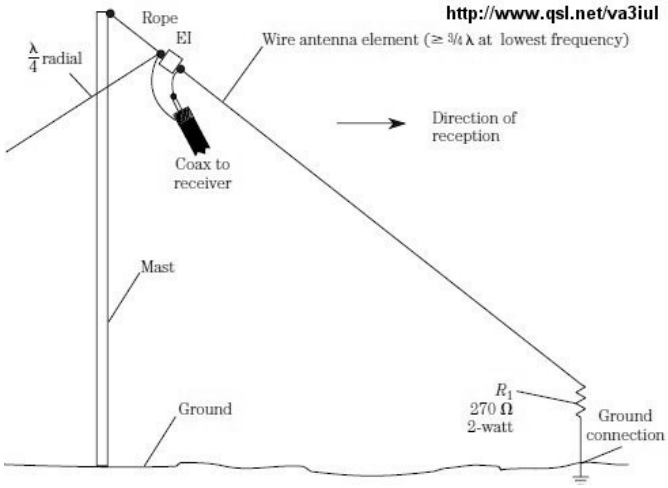

40 - Double Extended Zepp Antenna

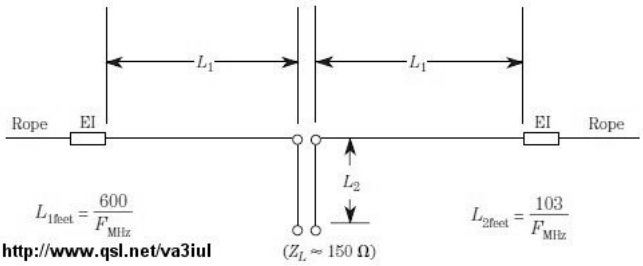

41 - TCFTFD Dipole Antenna

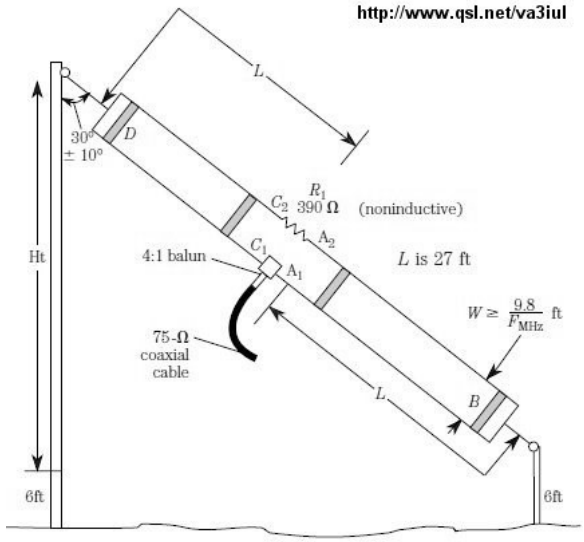

42 - Vee-Sloper Antenna

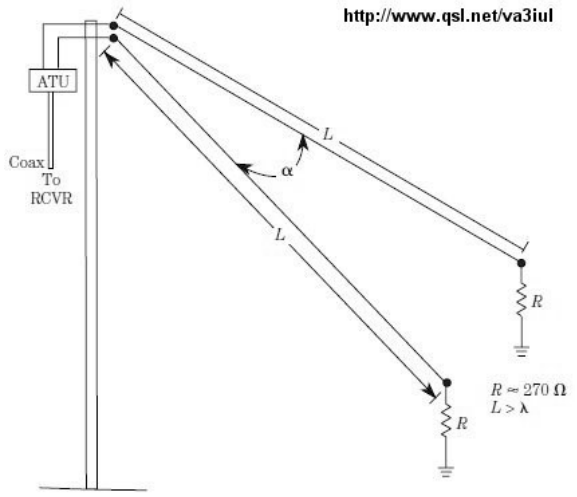

43 - Rhombic Inverted-Vee Antenna

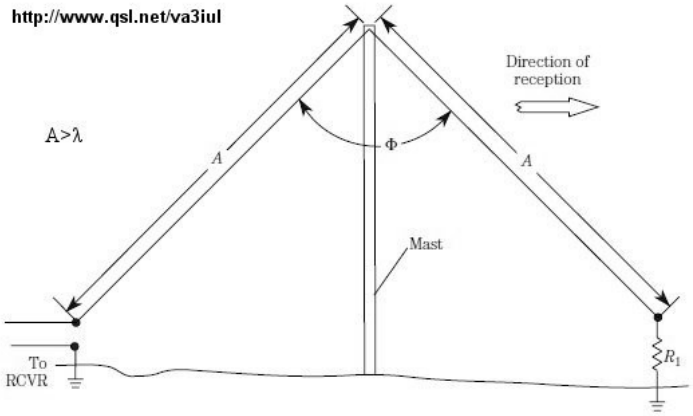

44 - Counterpoise Longwire

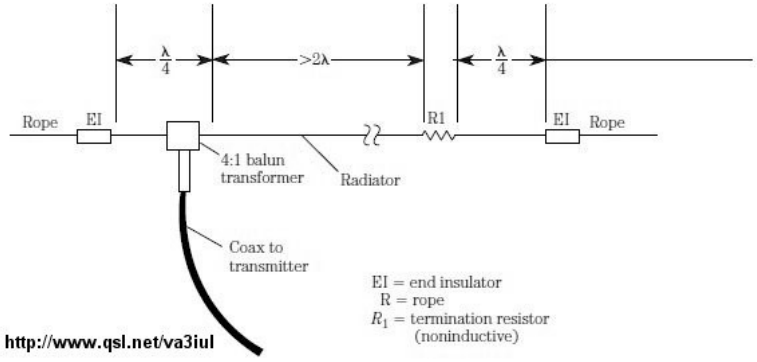

45 - Bisquare Loop Antenna

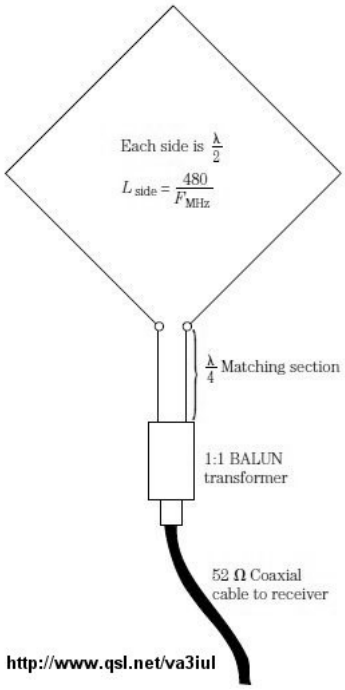

---

46 - Piggyback Antenna for 10m

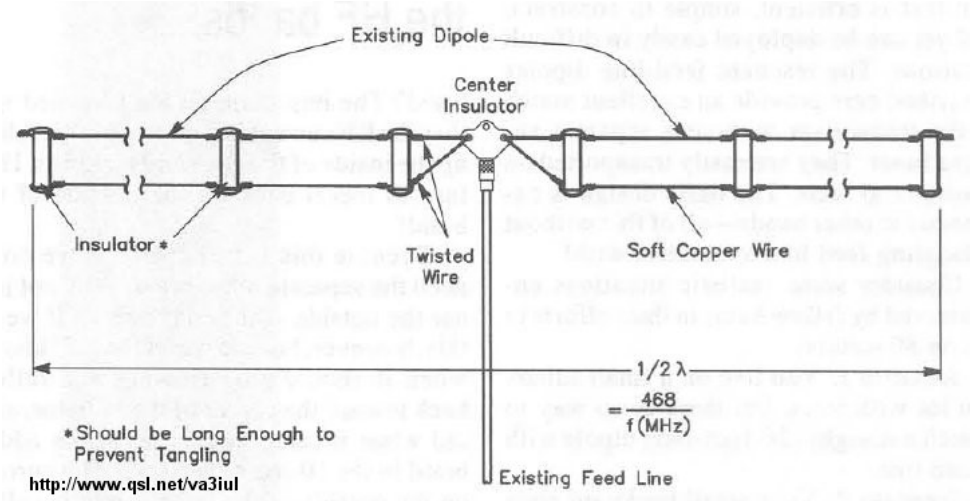

---

47 - Vertical Sleeve Antenna for 10m

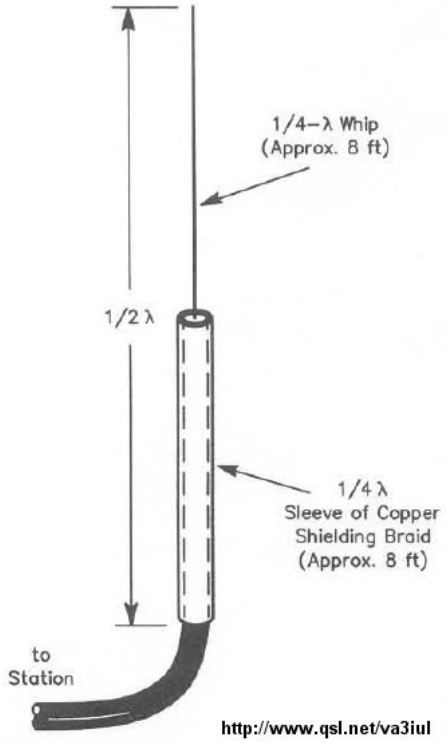

48 - Double Windom Antenna

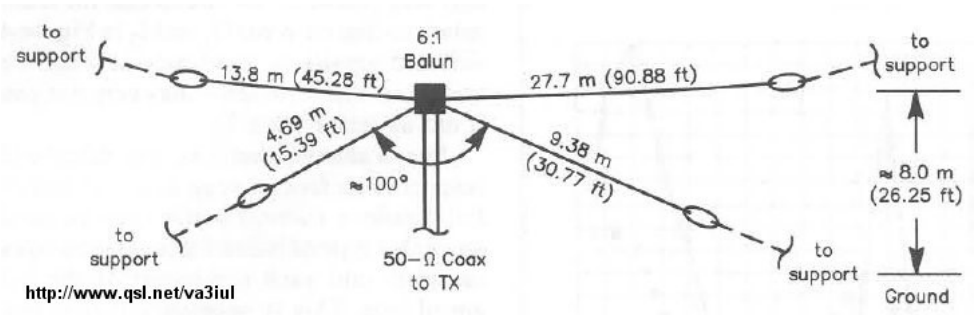

49 - Double Windom for 9 Bands

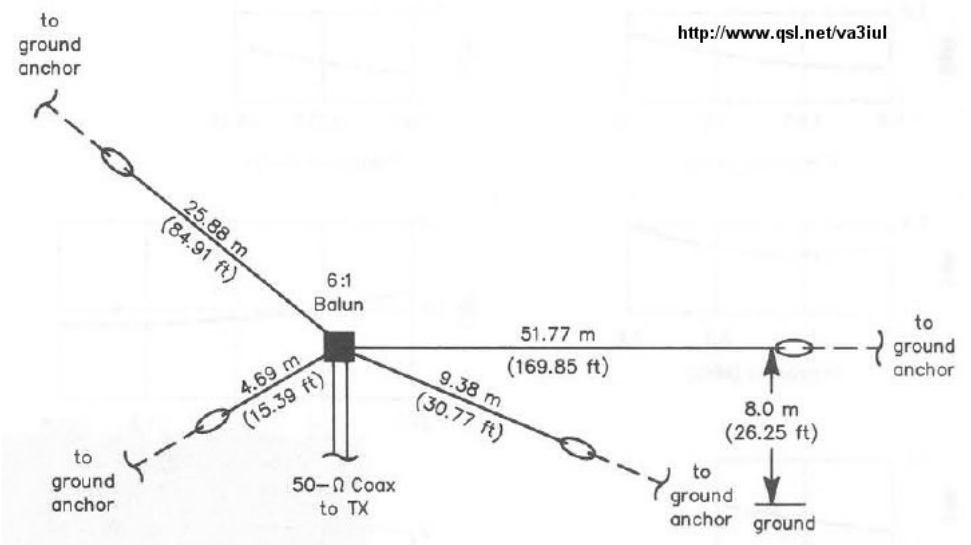

50 - Collinear Trap Antenna

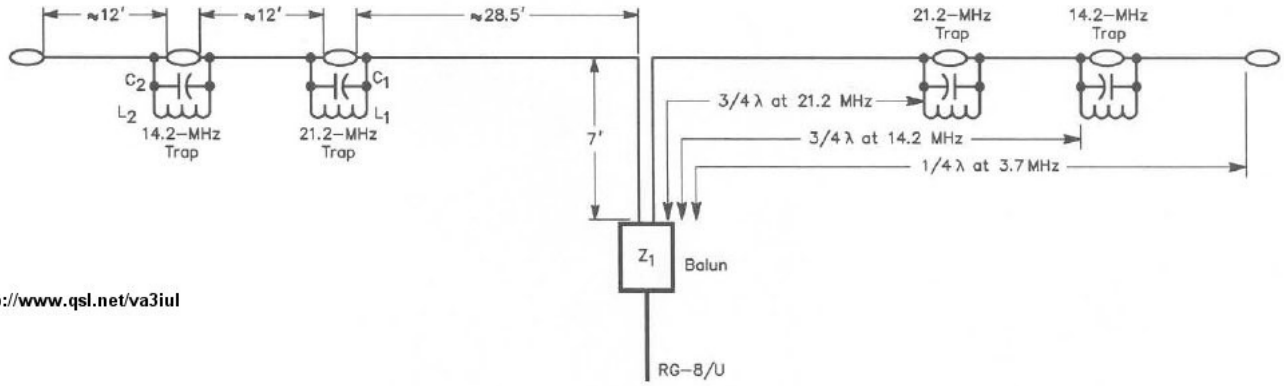

C1, C2—25-pf. 6000-volt disk ceramic. See text.
L_1—Approx. 2 µH–4¾ turns No. 18, 2¼-inches diam., ⅜ inch long, or 5 turns No. 18, 2-inch diam., 16 tpi. See text.

L_2—Approx. 5 µH.—8 turns No. 18, 2¼-inch dia., ⅝ inch long, or 9 turns No. 18, 2-inch diam. 16 tpi. See text.
Z_1—1 to 1 balun.

---

51 - Short Dipole Antenna for 40m - 80m - 160m

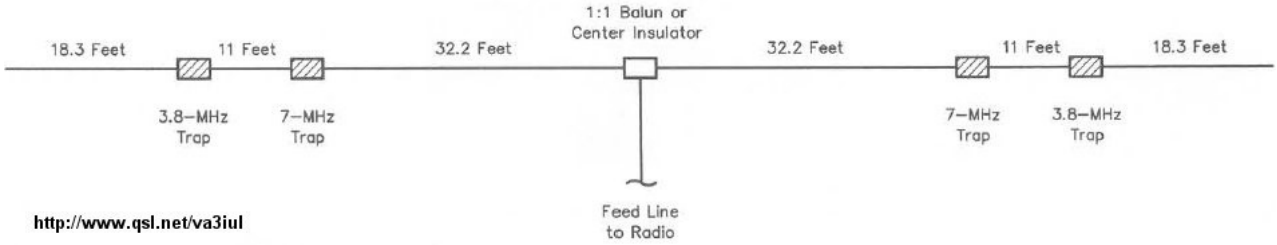

---

52 - Center Fed-Zepp Antenna for 80m - 40m

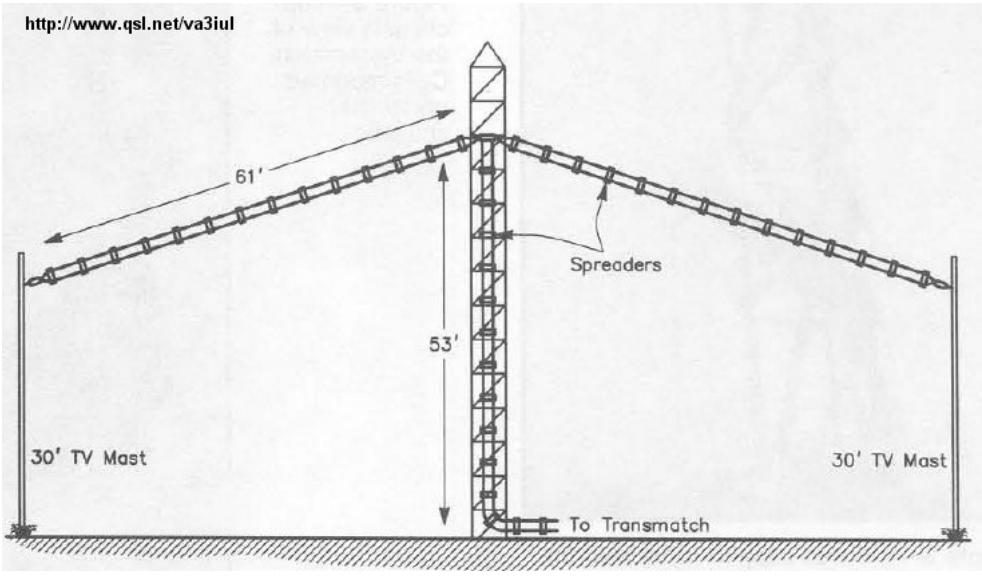

---

53 - All-Bands Antenna

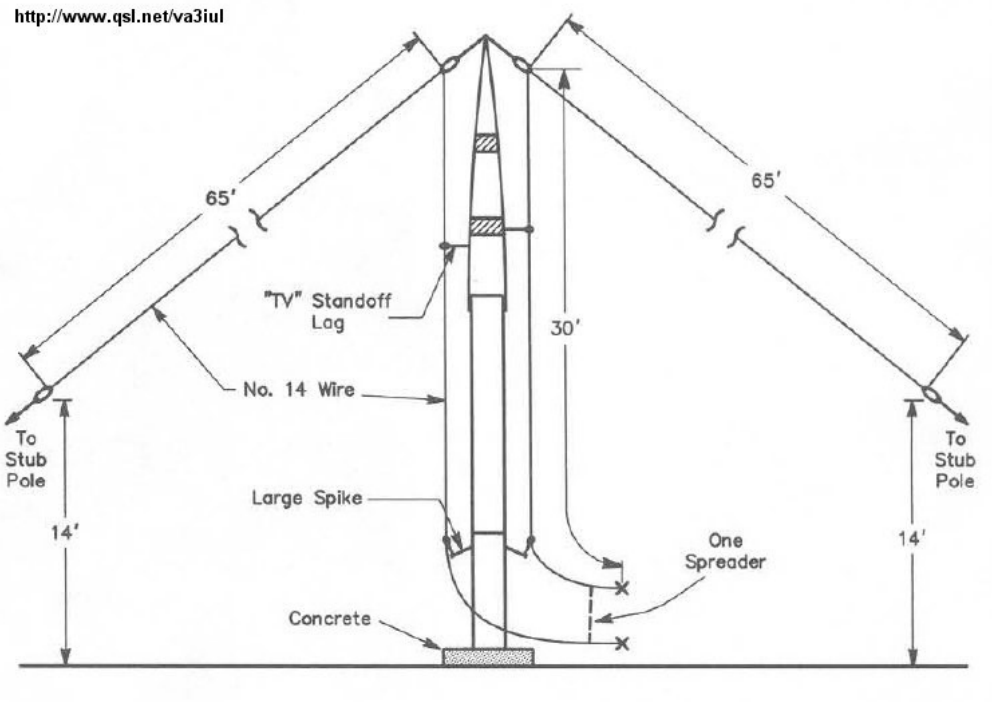

54 - All-Bands Dipole Antenna

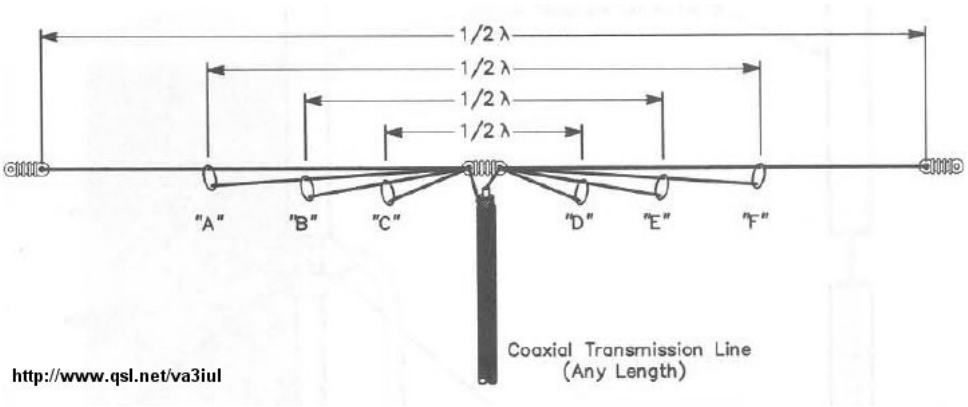

55 - Multiband Z Antenna

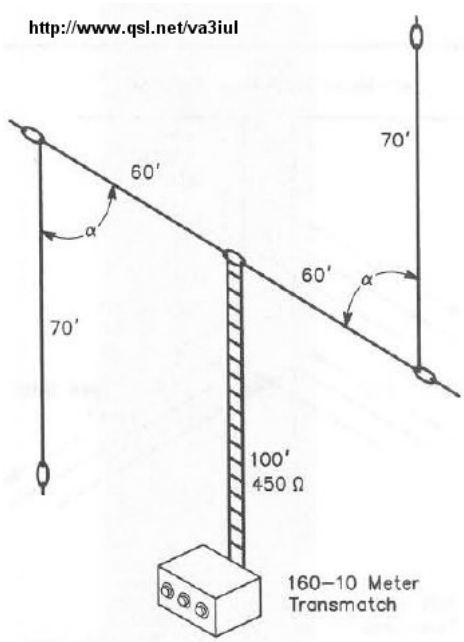

56 - Multiband Dipole Antenna

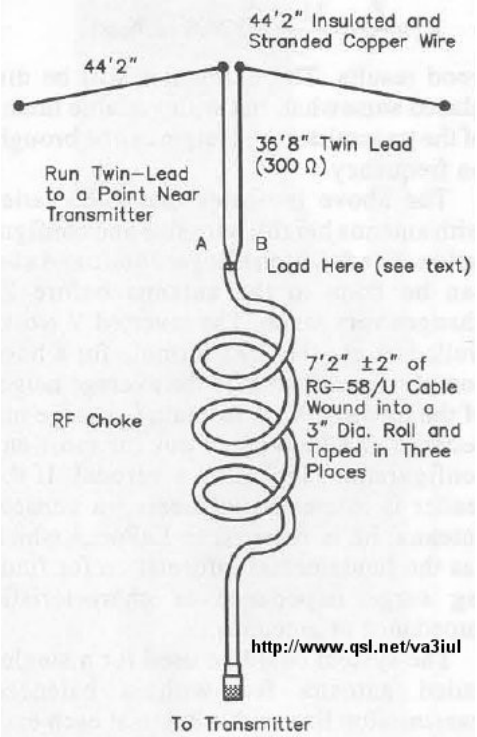

57 - Five-Bands No-Tuner Antenna

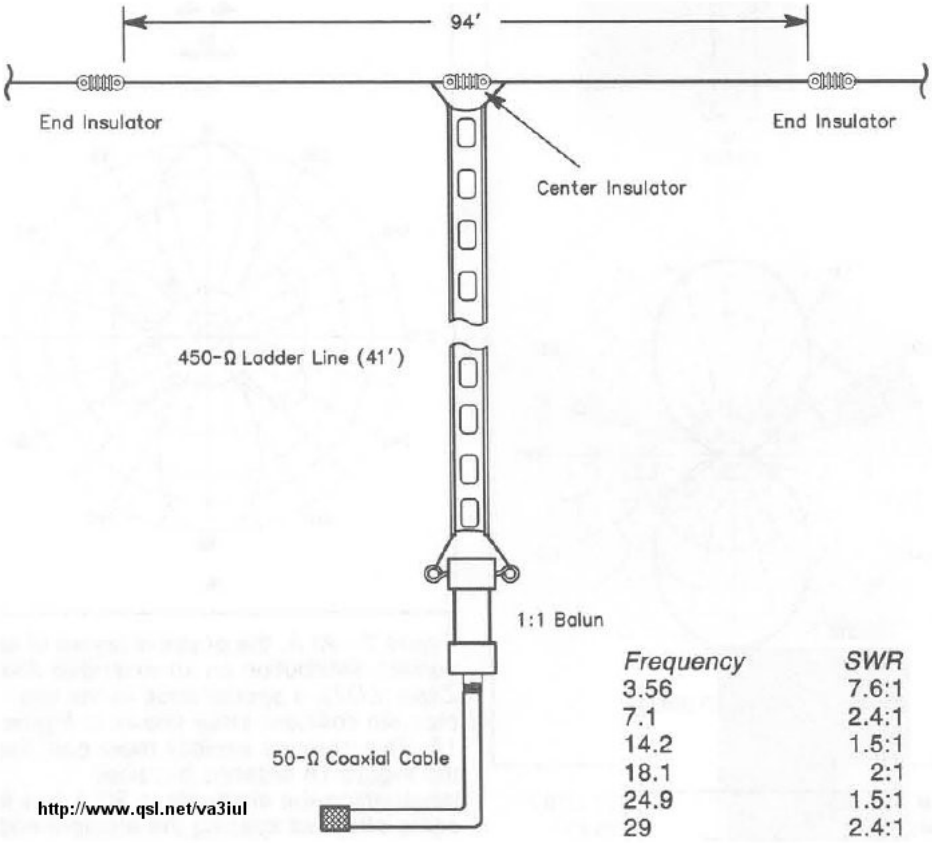

Frequency	SWR
3.56	7.6:1
7.1	2.4:1
14.2	1.5:1
18.1	2:1
24.9	1.5:1
29	2.4:1

58 - Dualband Full-wave Loop Antenna for 80m-40m

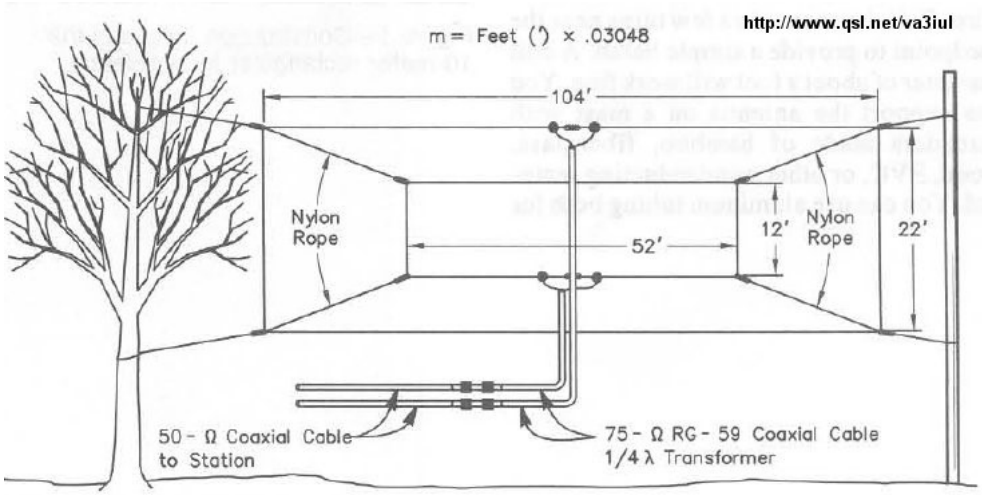

59 - Loop Antenna for 10m

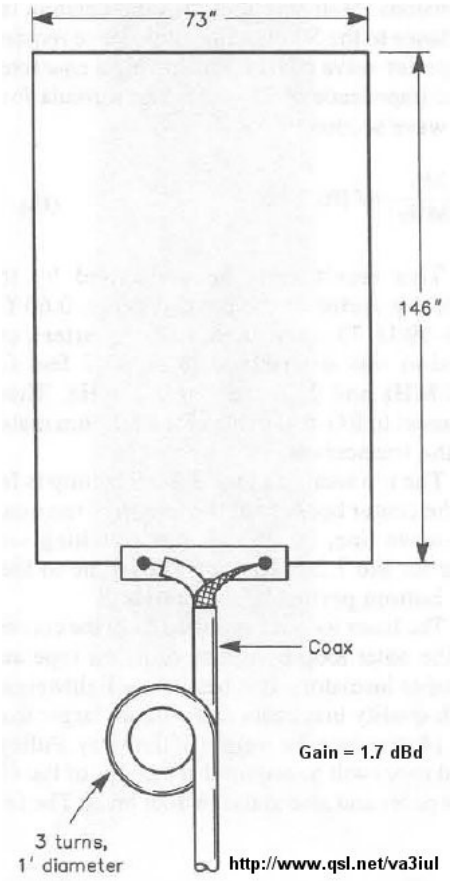

60 - Lazy Quad Antenna for 10m

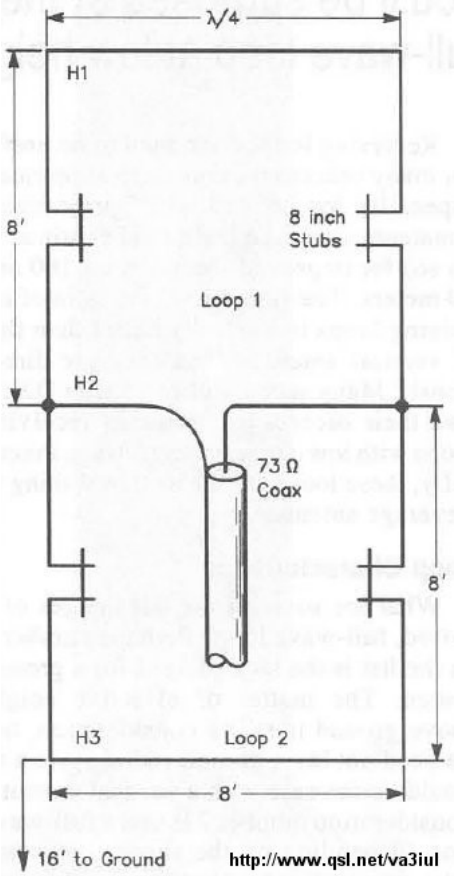

61 - Tri-band Delta Loop Antenna for 80m - 40m - 30m

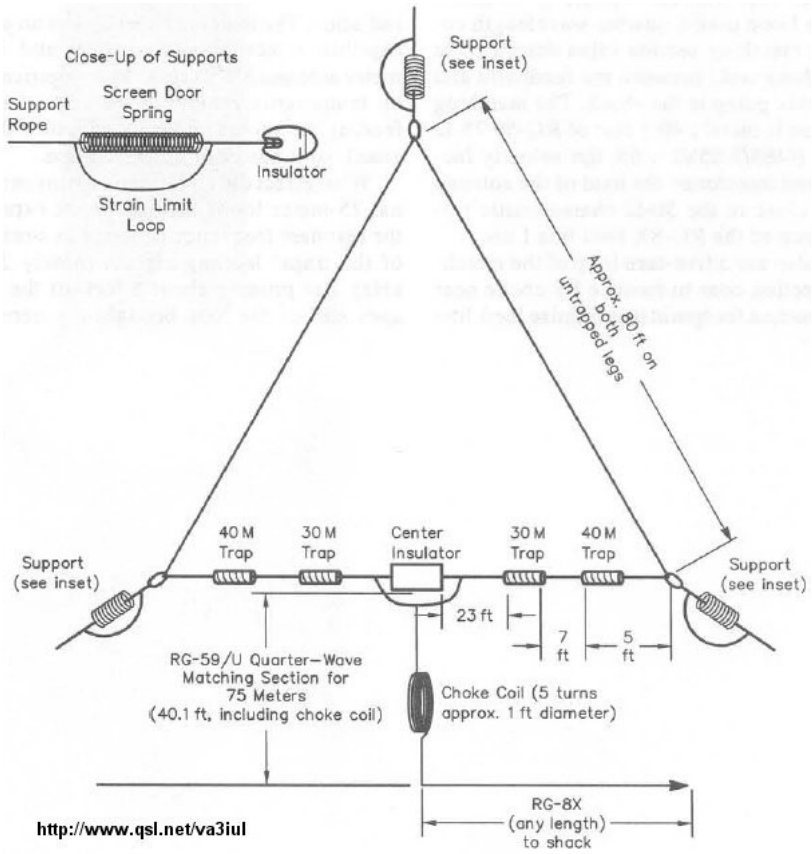

62 - Dual-band Loop Antenna for 30m - 40m

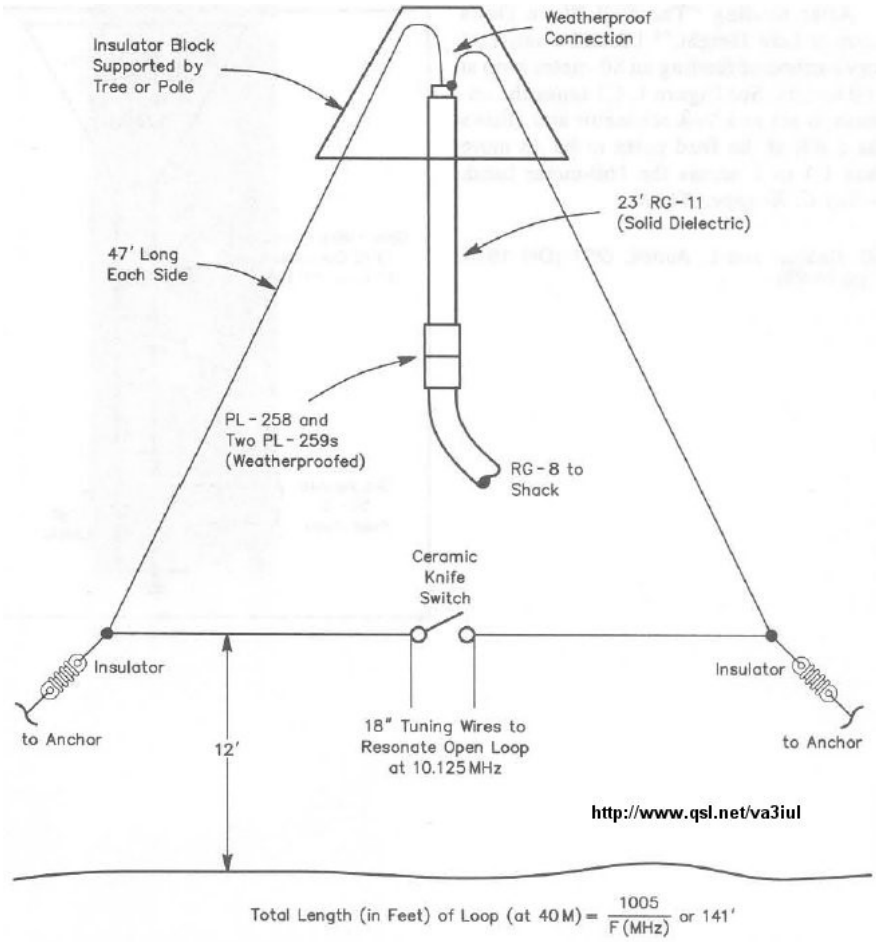

63 - Wire-Beam Antenna for 80m

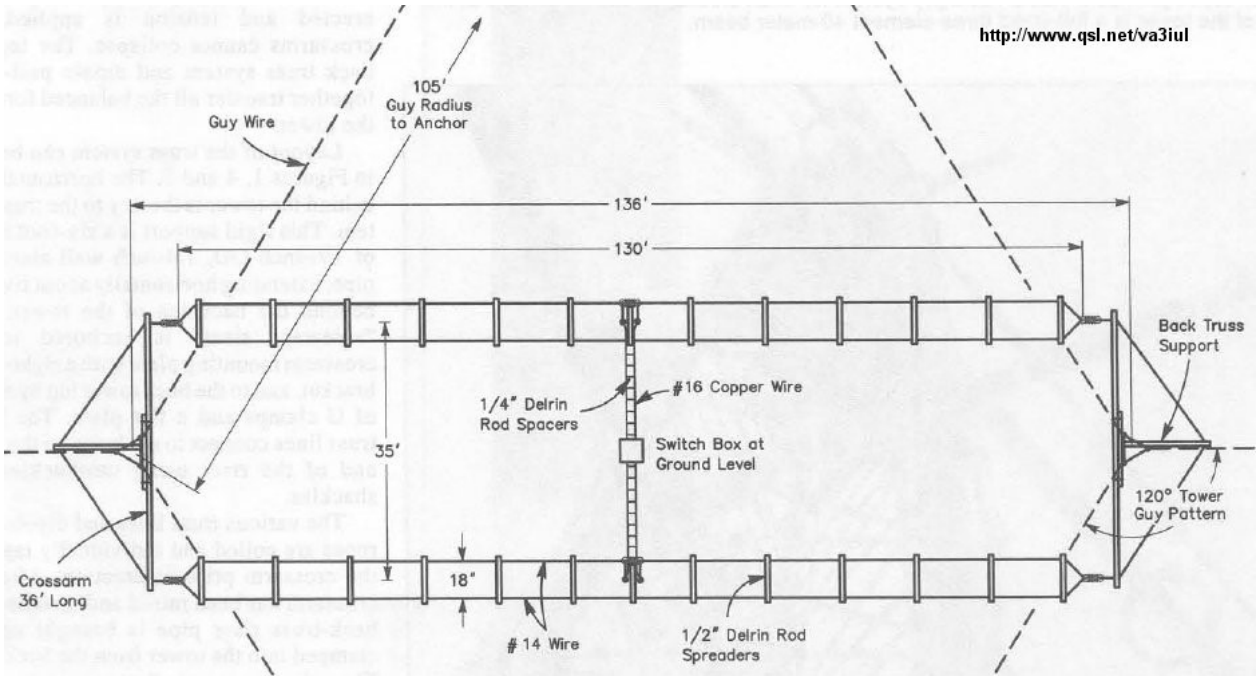

64 - Dual-Band Sloper Antenna

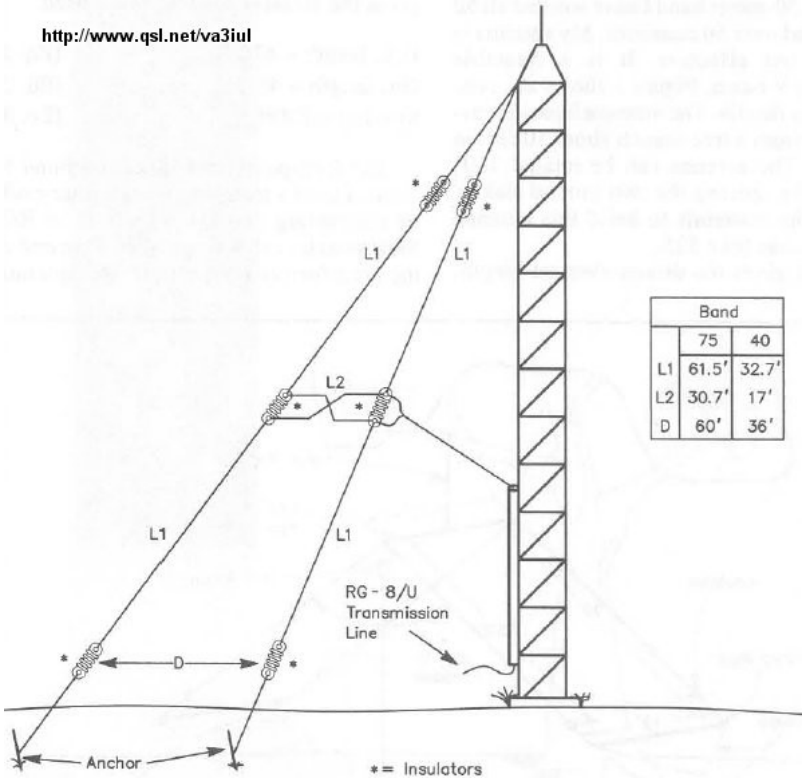

	Band	
	75	40
L1	61.5'	32.7'
L2	30.7'	17'
D	60'	36'

65 - Inverted-V Beam Antenna for 30m

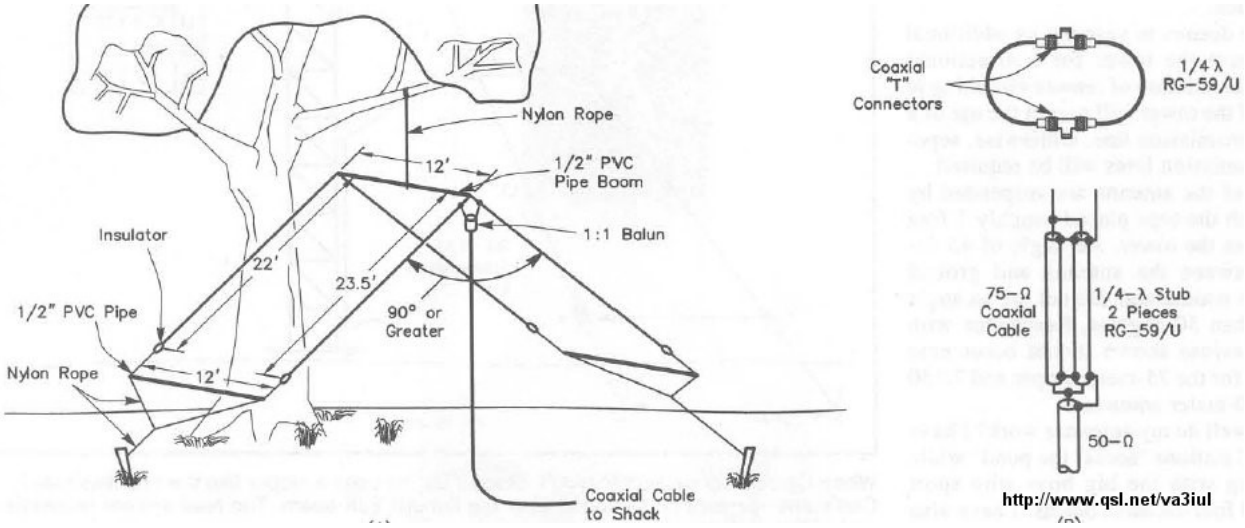

66 - ZL-Special Beam Antenna for 15m

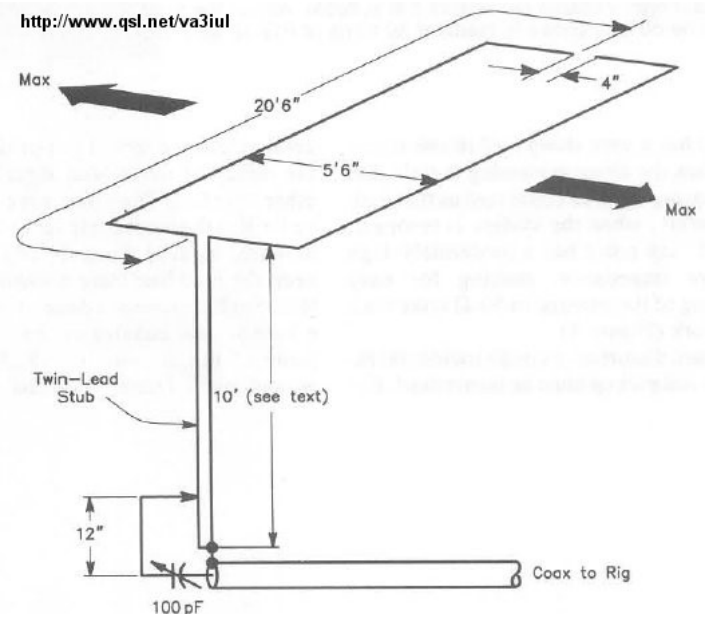

67 - Half-Sloper Antenna for 160m

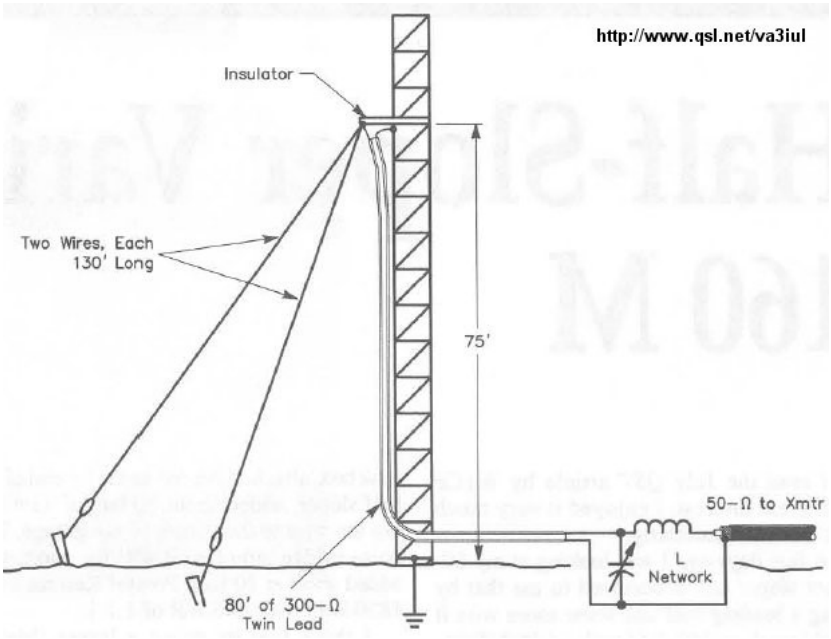

68 - Two-Bands Half Sloper for 80m - 40m

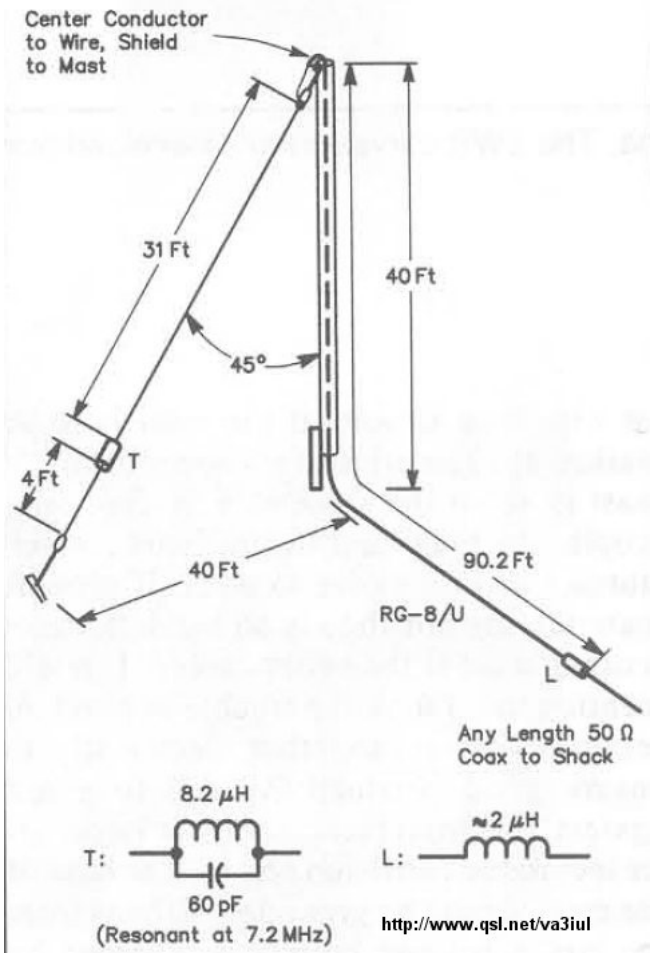

69 - Linear Loaded Sloper Antenna for 160m

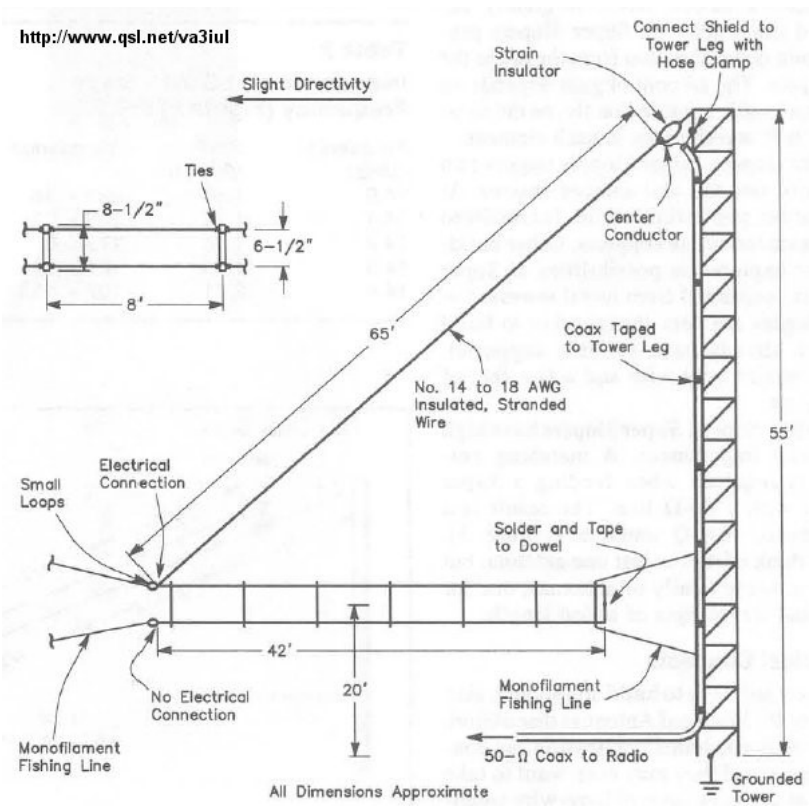

70 - Super-Sloper Antenna

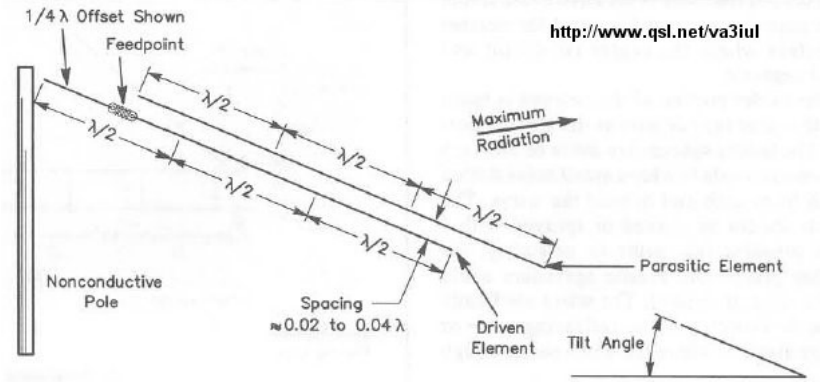

71 - Tower Pole as a Vertical Antenna for 80m

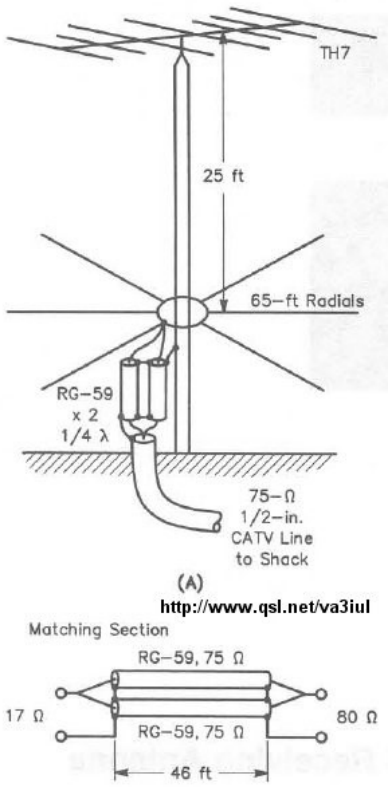

72 - Clothesline Antenna

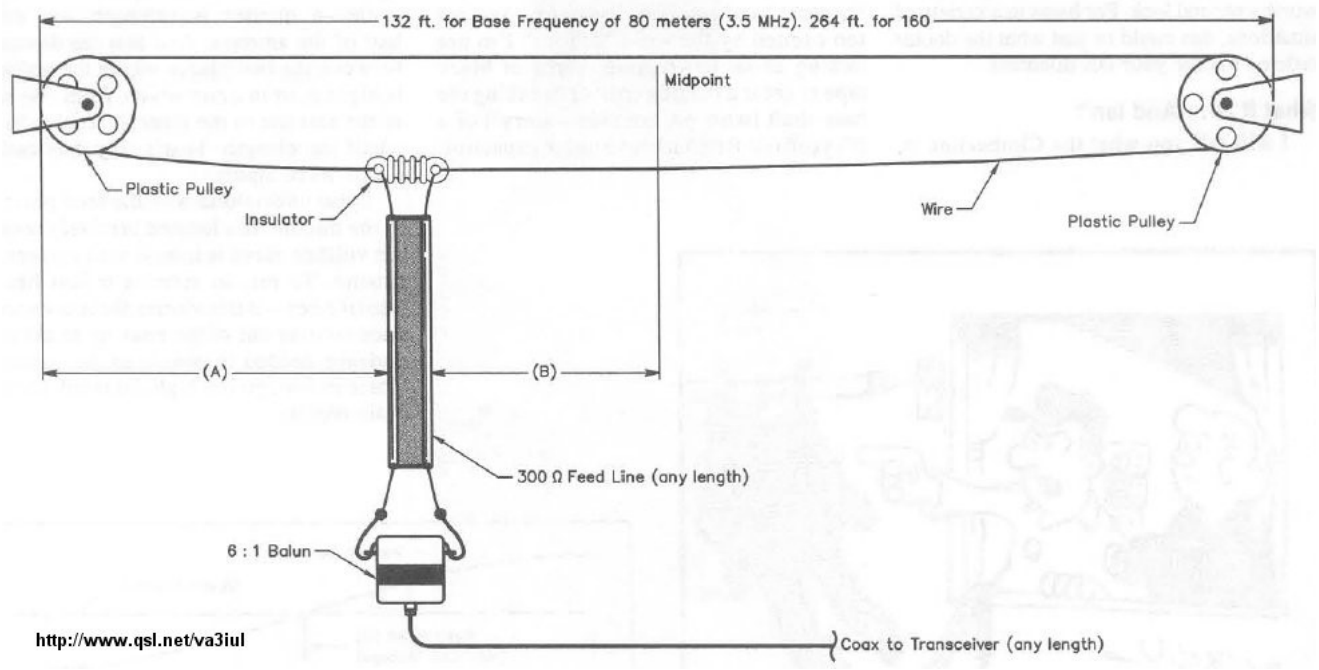

73 - Curtain Zepp Antenna for 160m, 80m, 40m

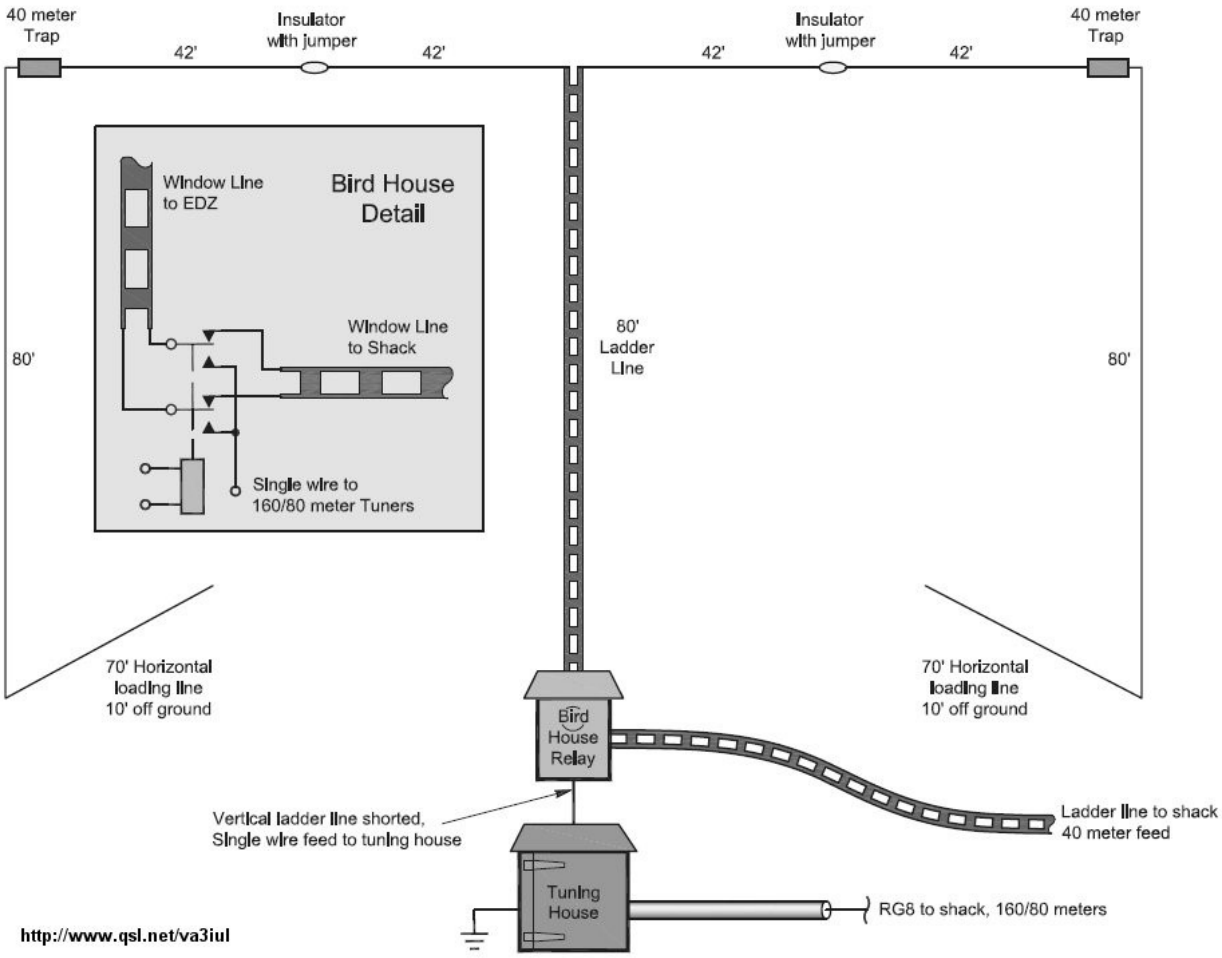

74 - Collinear Array Antenna for 40m, 30m, 20m

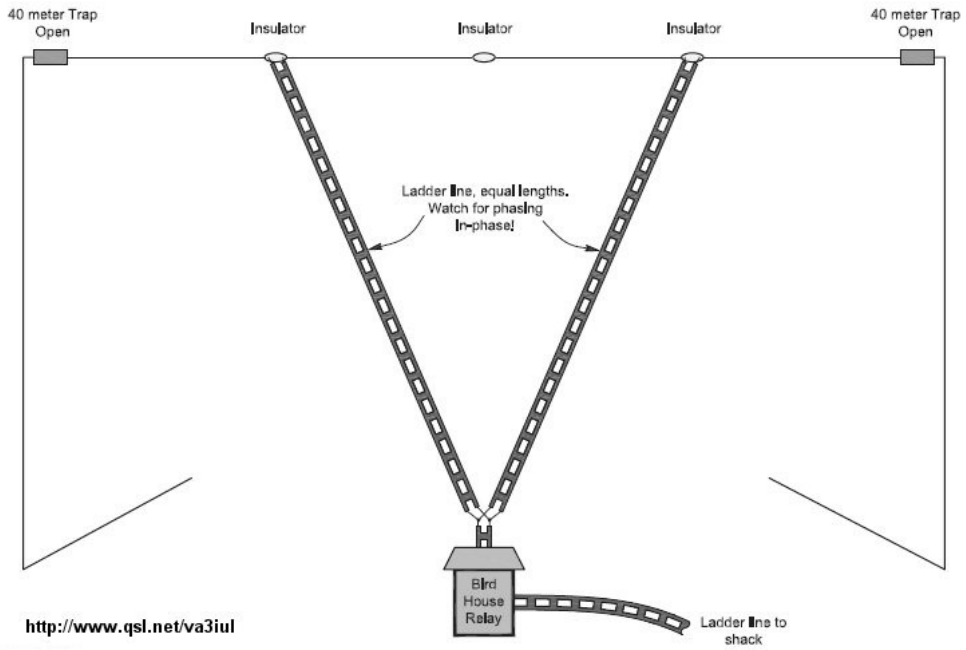

75 - 160m Inverted Delta Loop

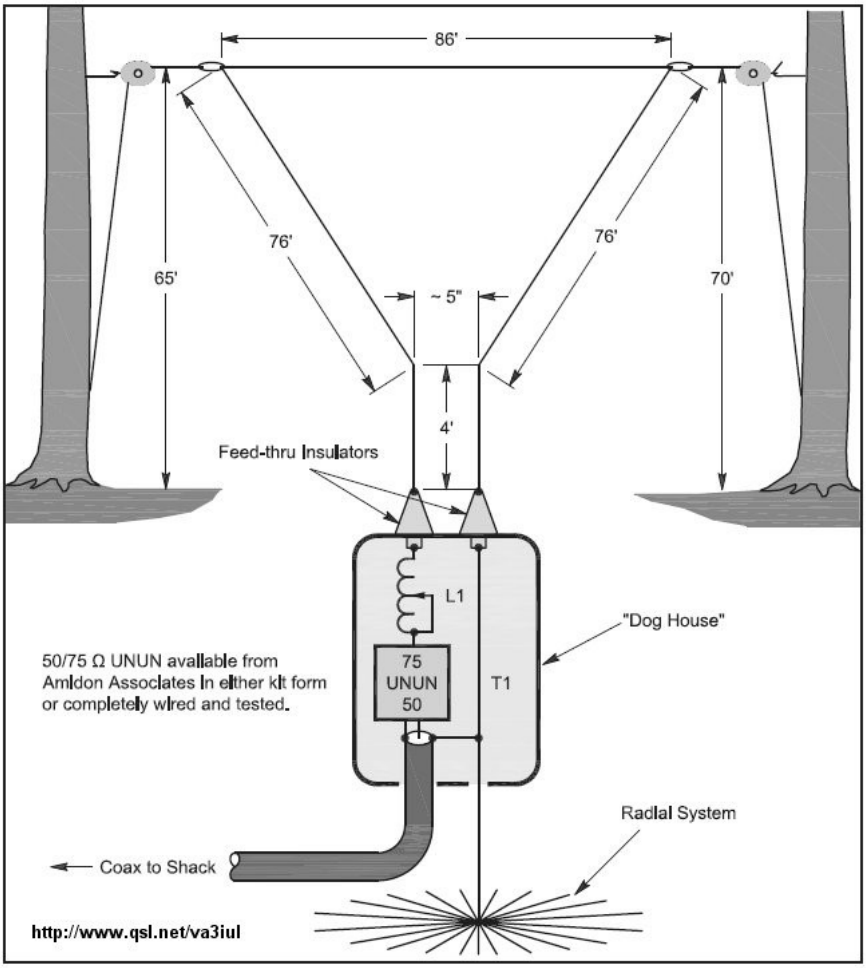

76 - Half Rhombic Unidirectional Vertical for 20m to 6m

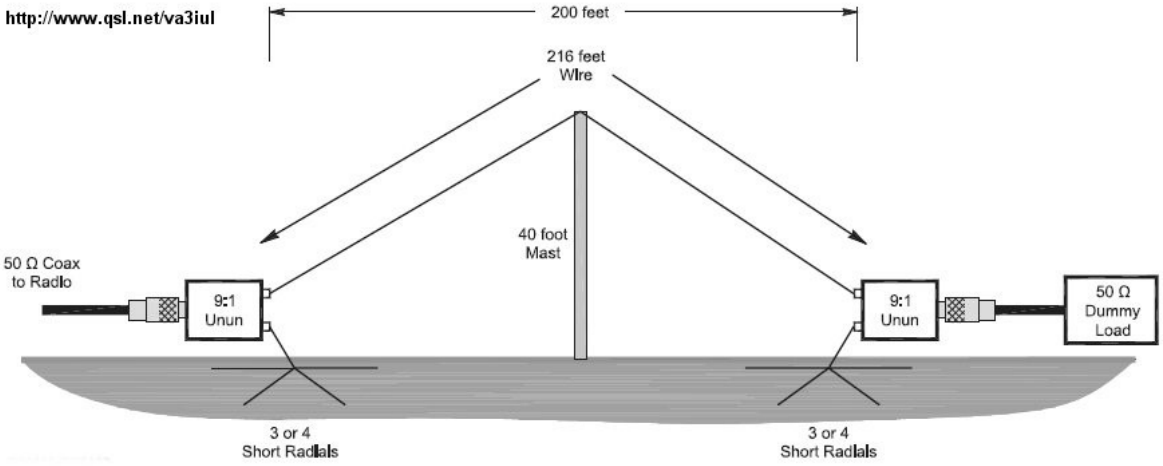

77 - Capacitance Loaded Vertical Antenna for 160m

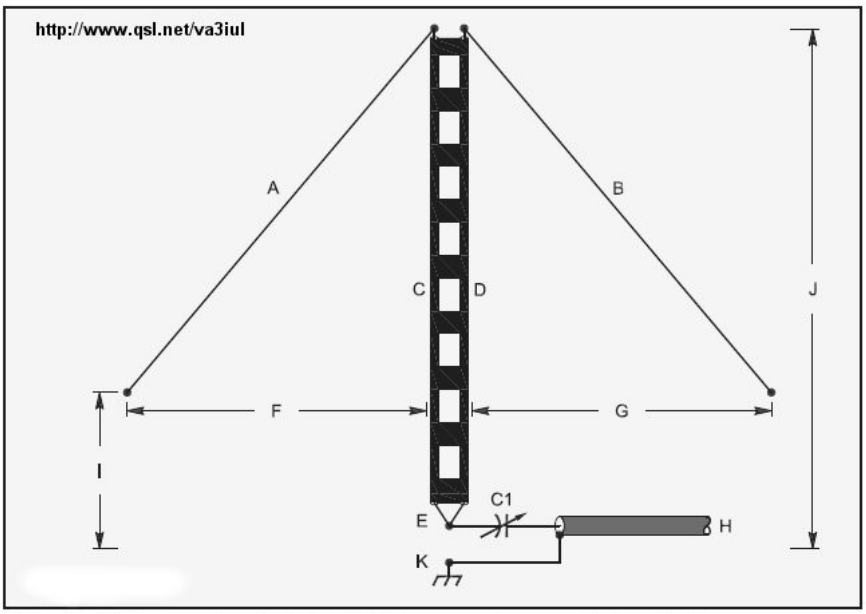

C1 — Variable capacitor, 0-1500 pF, 7 kV.
A, B — Sloping segments of 66 foot, 4 inch pieces of #16 AWG enameled copper wire soldered to the top of segments C and D and forming a 45° angle.
C, D — 59 feet of 450 Ω open wire or window line or, alternatively, two parallel lengths of #16 AWG enameled copper wire with a 1 inch separation.
E — 1 inch triangle formed by the bottom ends of the open wire line. Solder them tightly at the vertex and connect to C1.
F, G — Distance between the lower ends of segments A and B from segments C and D, 51 feet.
H — Any length of 50 Ω coaxial cable (RG-213 in this case). The central conductor must be soldered to C1, and the braid to the ground radials.
I — Approximately 16 feet from ground to lower ends of sloping segments A and B.
J — 60 feet from antenna top to bottom.
K — Ground radials, 60 ¼ λ (the more the better — 32 will form a reasonable ground).

---

78 - Fan Dipole Antenna for 80m to 6m

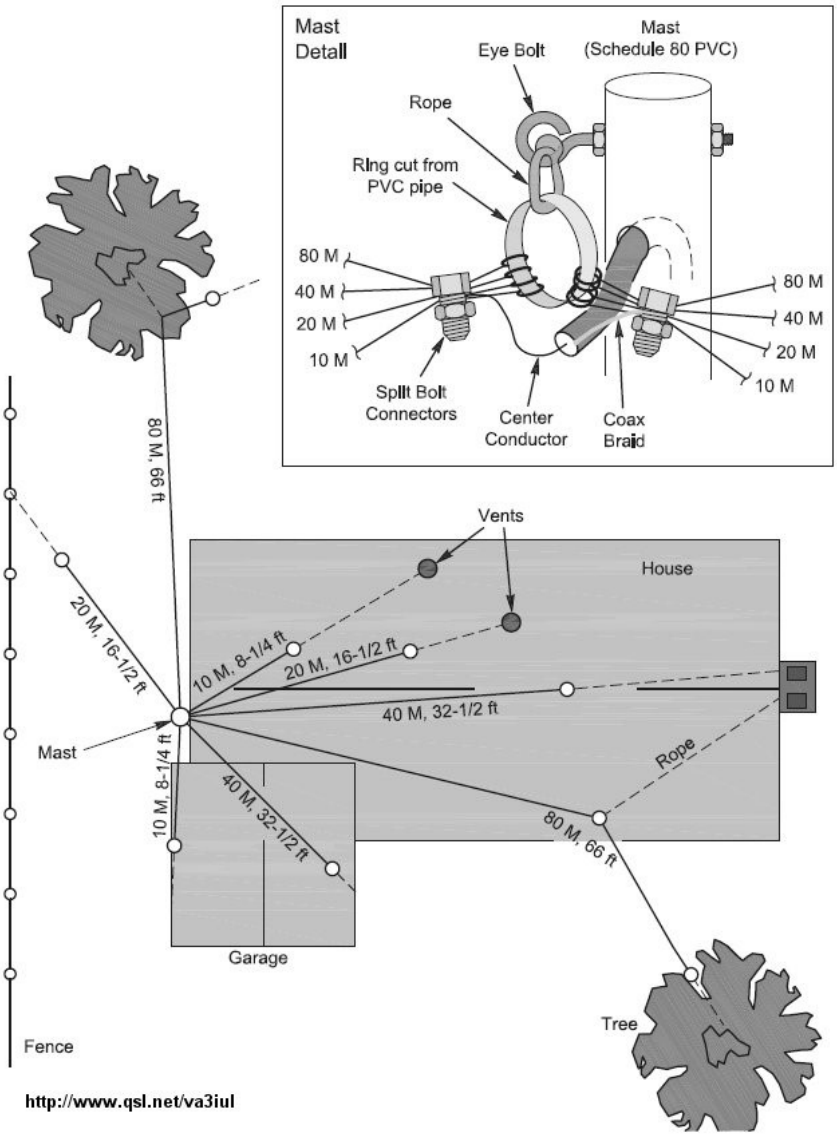

79 - Wire Ground Plane Antenna

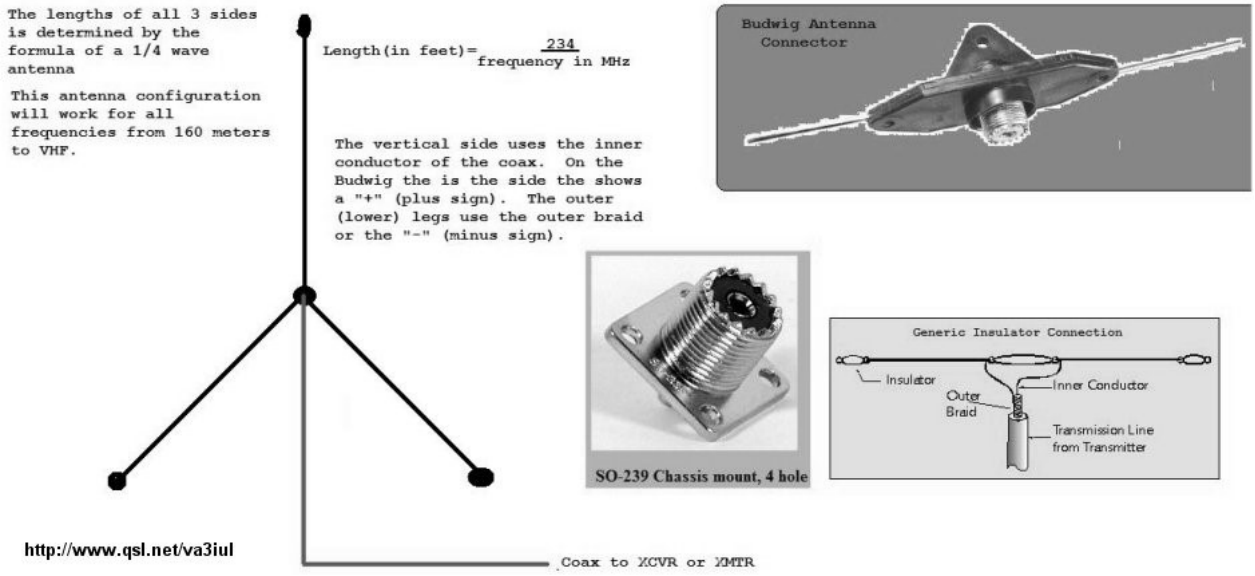

80 - Inverted Delta Loop Antenna for 160m

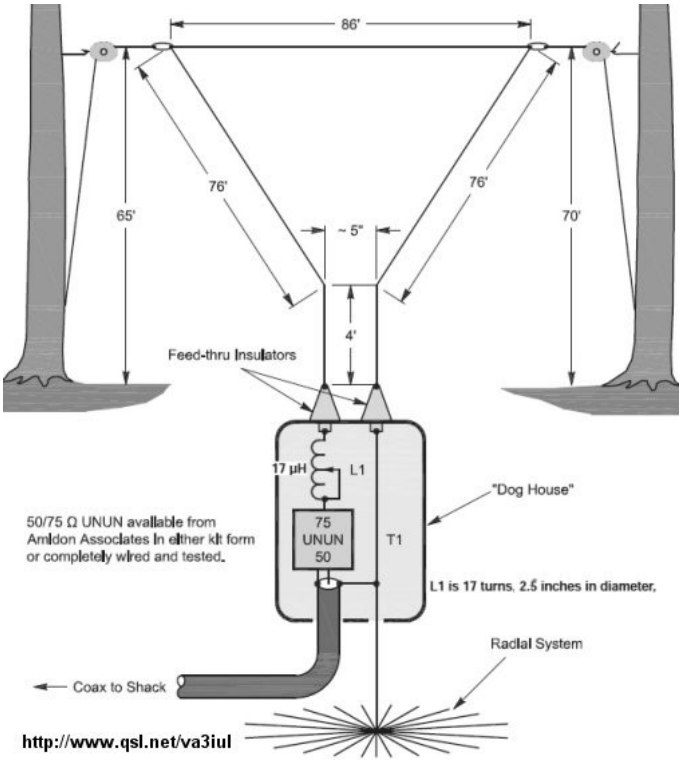

81 - Inverted-L for 160m

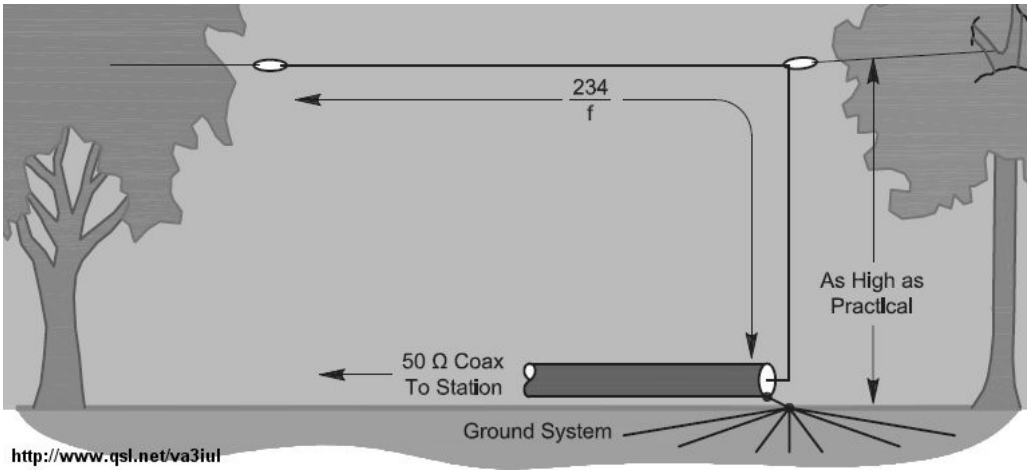

82 - 300ohm-Ribbon Dual Band Dipole

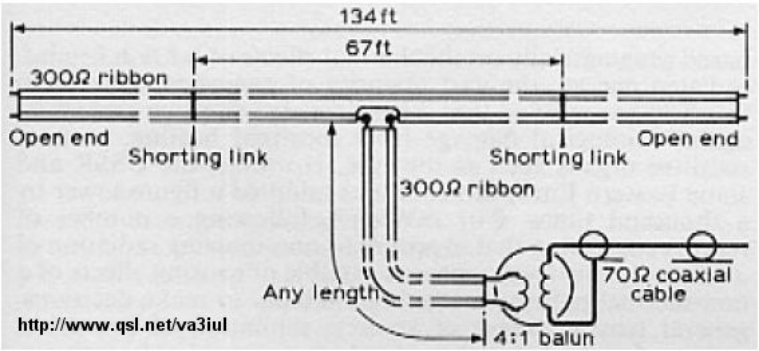

83 - Tri-Band Beam for 20m, 15m, 10m

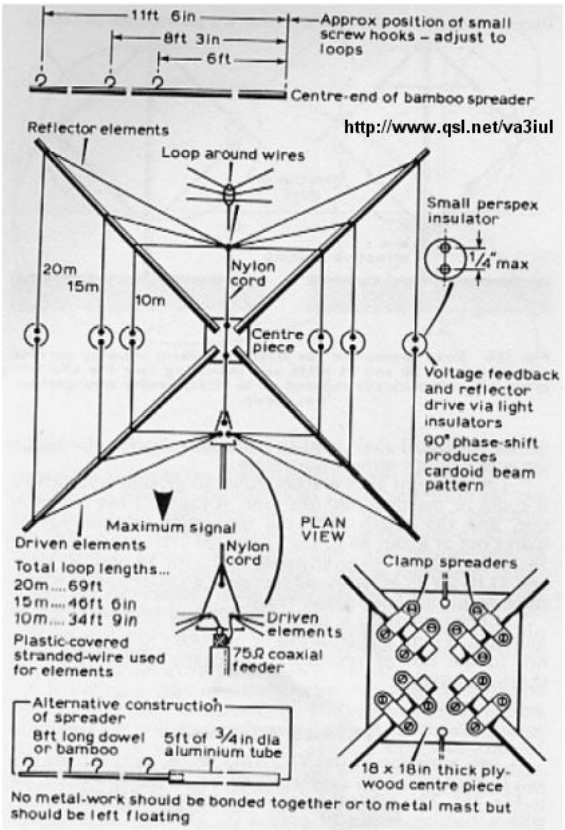

84 - Mini-Horse Yagi Antenna

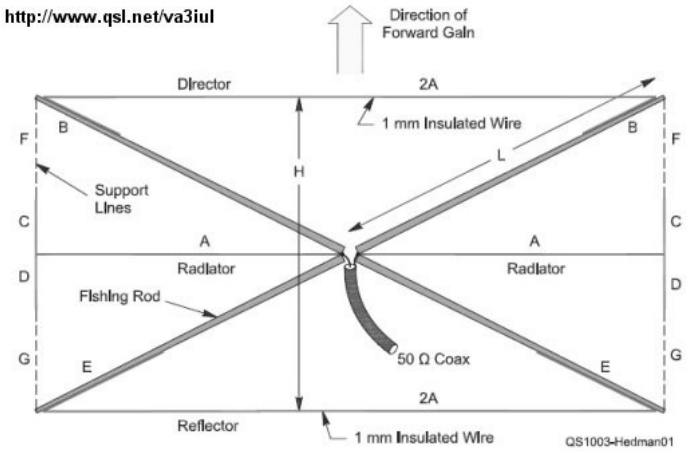

MHz	A	B	C	D	E	F	G	H	L
144	1' 2.2"	0' 4.7"	0' 3.5"	0' 1.8"	0' 7.1"	0' 4.7"	0' 6.5"	1' 4.5"	1' 4.3"
28	5' 11.6"	1' 10.8"	1' 6.9"	0' 9.4"	2' 11.8"	1' 10.8"	2' 8.3"	6' 11.4"	6' 11.0"
21	7' 11.6"	2' 6.3"	2' 1.2"	1' 0.6"	3' 11.6"	2' 6.3"	3' 6.9"	9' 3.0"	9' 2.6"
14	11' 11.3"	3' 9.7"	3' 1.8"	1' 6.9"	5' 11.2"	3' 9.7"	5' 4.6"	13' 10.9"	13' 9.7"
7.1	23' 10.5"	7' 7.3"	6' 3.6"	3' 1.8"	11' 10.5"	7' 7.3"	10' 9.1"	27' 9.8"	27' 7.4"

85 - Half-Rhombic Directive Antenna for 20m to 6m

http://www.qsl.net/va3iul

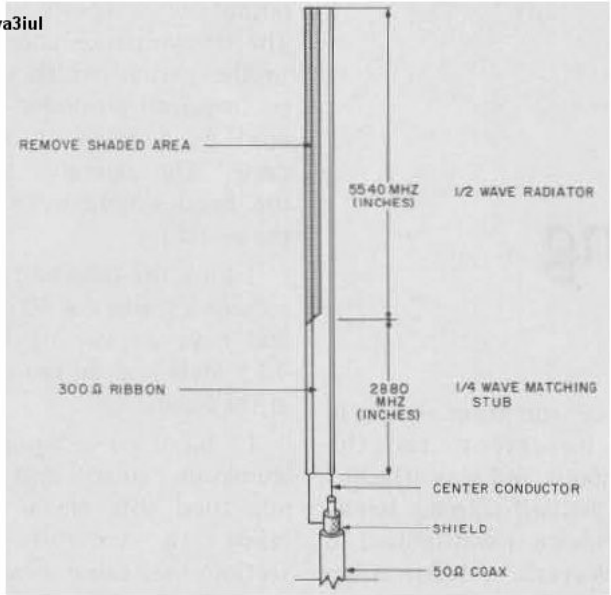

Frequency (MHz)	28.0	28.5	29.0	50.0	51.0	52.0	144	145	146	147
Radiator (inches)										
½ wave	197.8	194.3	191.0	110.8	108.6	106.5	38.4	38.2	37.9	37.7
Stub (inches)										
¼ wave	102.8	101.0	99.3	57.6	56.4	55.3	20.0	19.8	19.7	19.6

---

86 - Fan-Dipole Antenna for 80m, 40m, 20m

http://www.qsl.net/va3iul

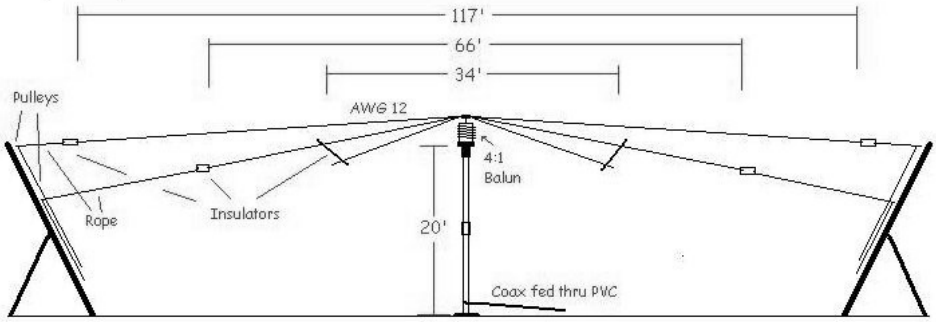

---

87 - Capacity Tuned Folded Loop Antenna for 20m

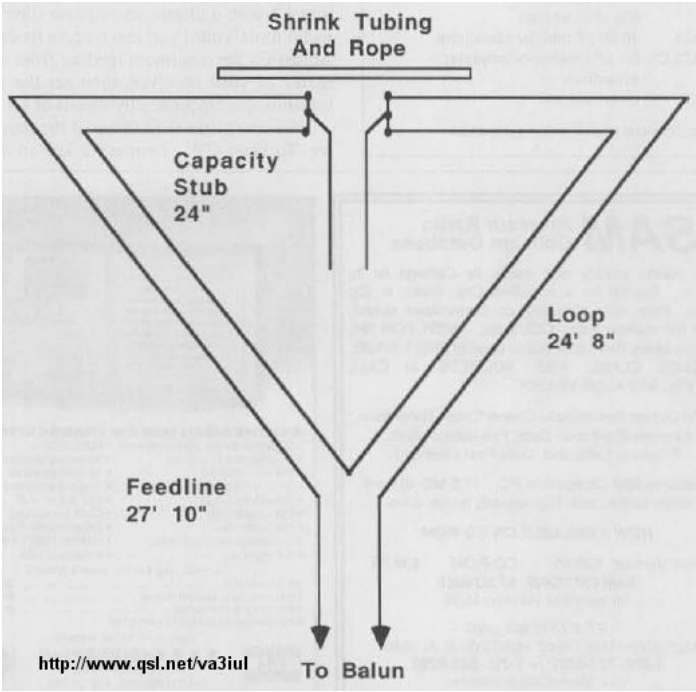

---

88 - Indoor Loop Antenna for 80m to 30m

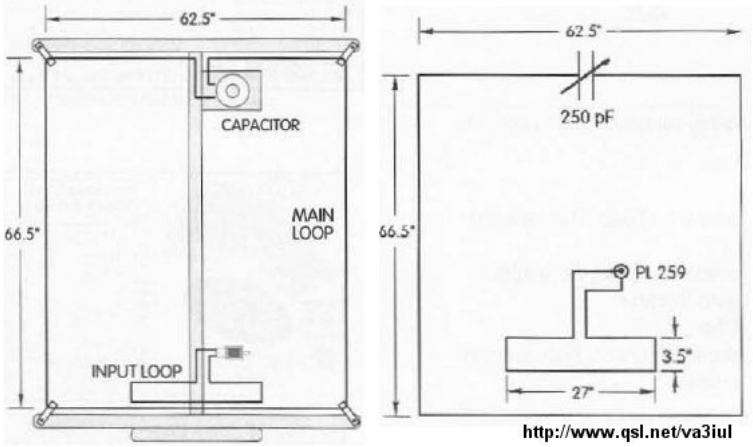

89 - Indoor Loop Antenna for 80m

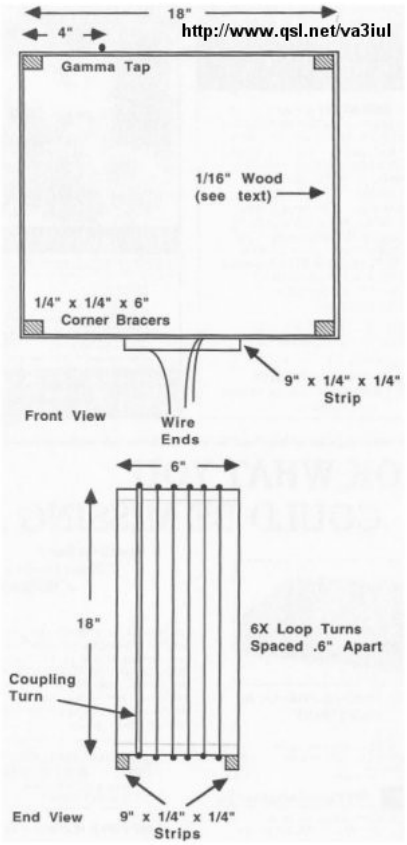

90 - Double-Delta Antenna 80m and 40m

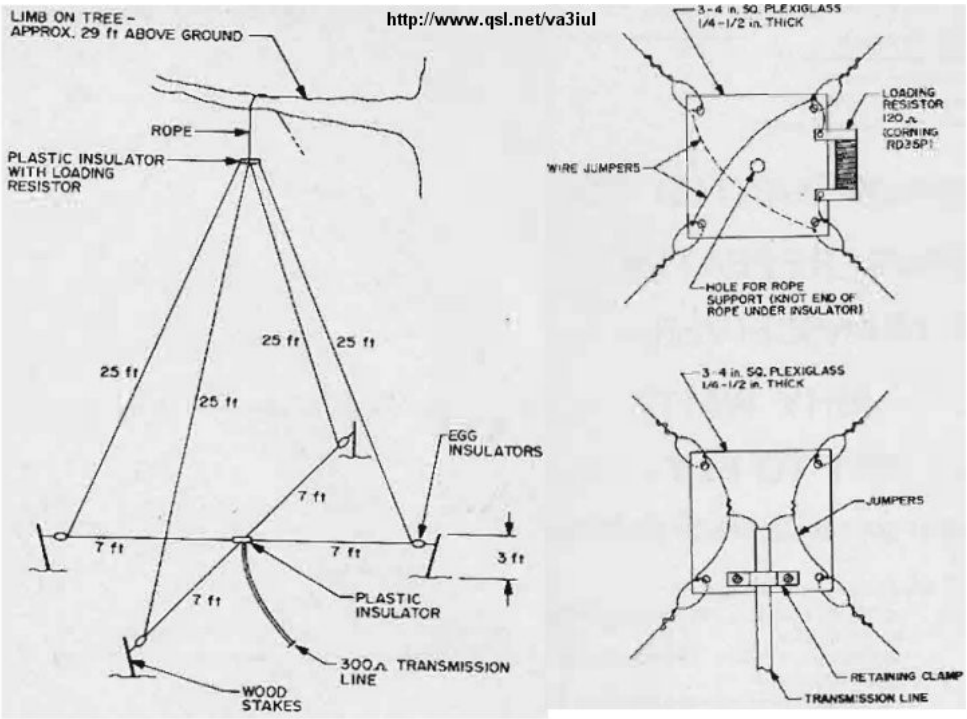

91 - Inductance-Loaded Shortened Dipole for 160m

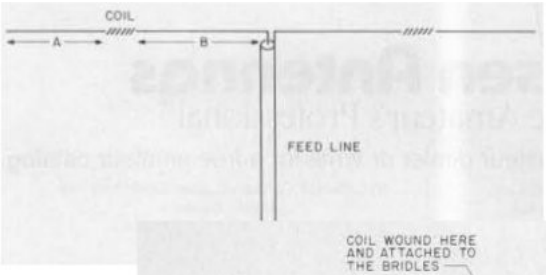

Overall Length (ft.)	Element A Length	Number Of Coil Turns	Element B Length
246.3	full-size antenna		
221.3	66.5	10	44.3
197.1	59.1	20	39.4
172.4	51.7	33	34.5
147.8	44.3	48	29.6
123.2	36.9	65	24.6
98.5	29.6	86	19.7

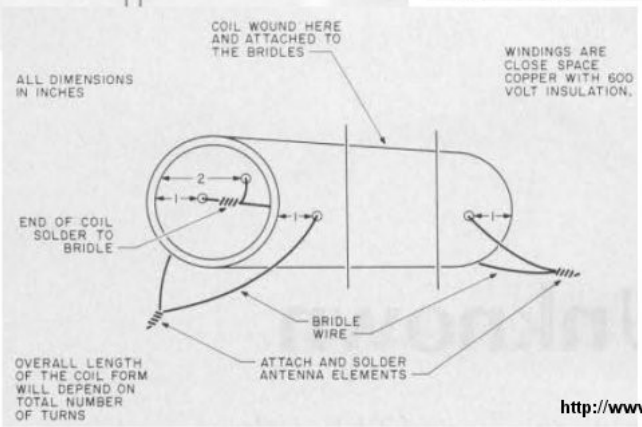

92 - V-Beam Antenna for 15m

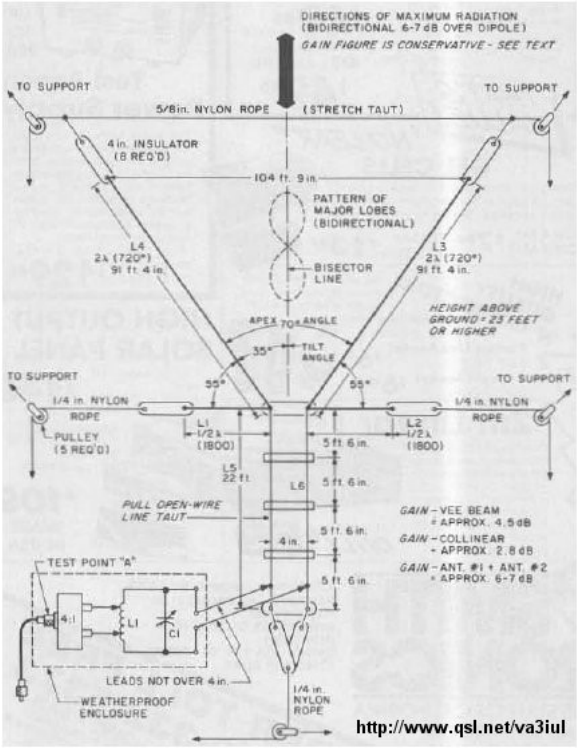

93 - Picnic Vertical Wire Antenna

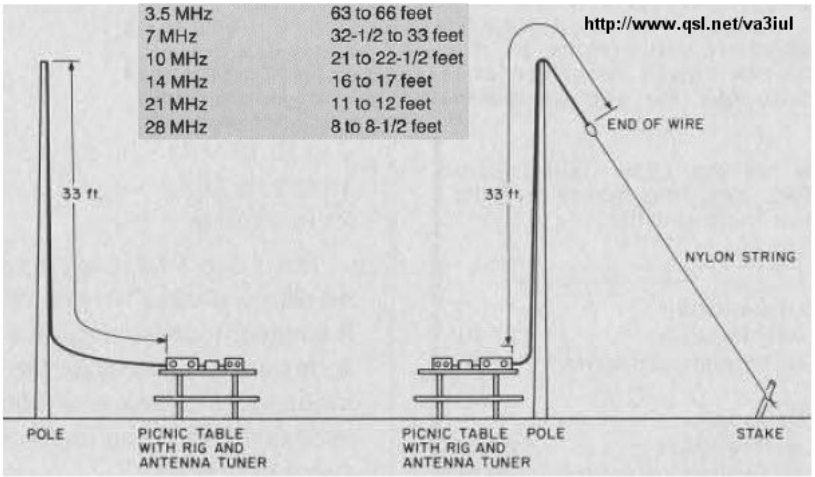

94 - Laid-Back Quad Antenna for 80m

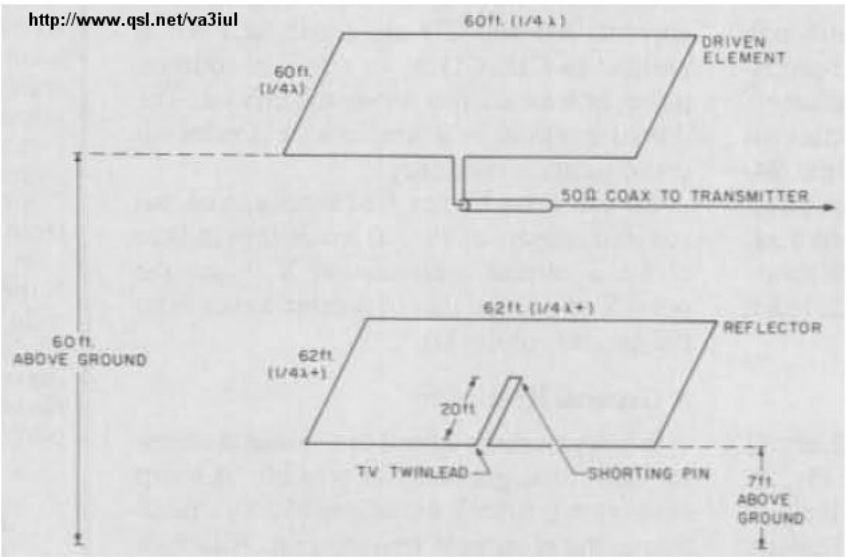

95 - Phased Loop Antenna

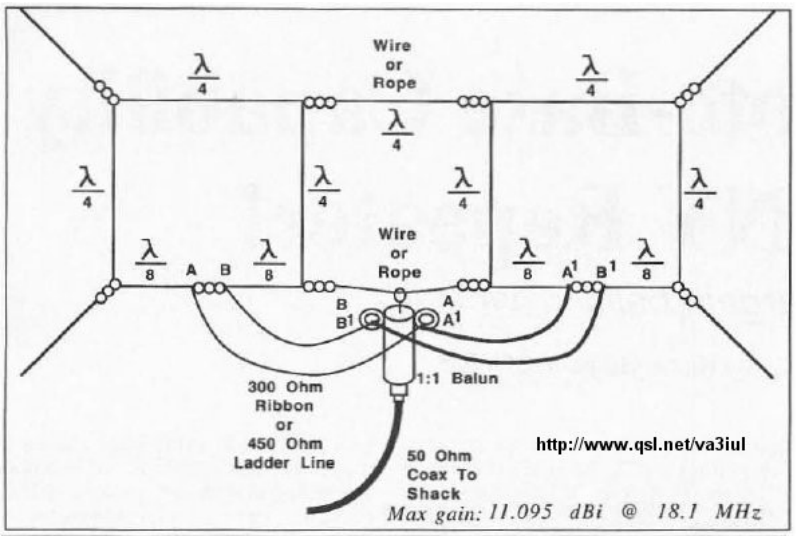

	λ/4	λ/8	300Ω Ribbon	450Ω Ladderline
40m	34.9 ft.	17.5 ft.	53.3 ft.	62.2 ft.
20m	17.6 ft.	8.8 ft.	27.0 ft.	31.2 ft.
17m	13.9 ft.	6.9 ft.	21.2 ft.	25.2 ft
15m	11.8 ft.	5.9 ft.	18.1 ft.	21.97 ft.
10m	8.67 ft.	4.33 ft.	13.2 ft.	15.33 ft.

96 - Loop Antenna for TX for 160m

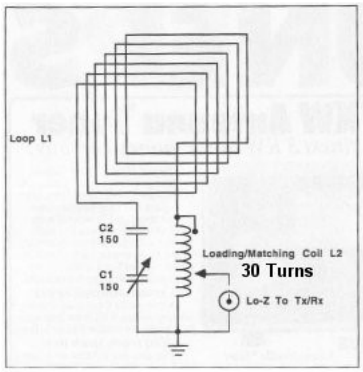

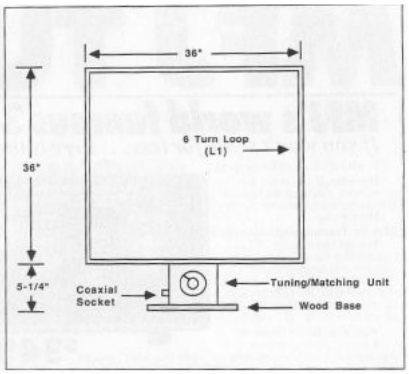

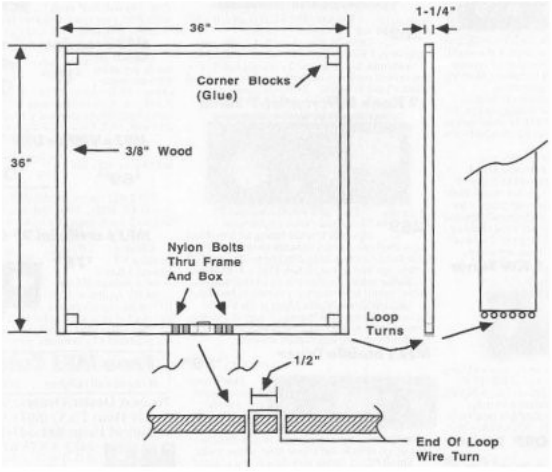

http://www.qsl.net/va3iul

97 - Morgain-Dipole Antenna for 160m and 80m

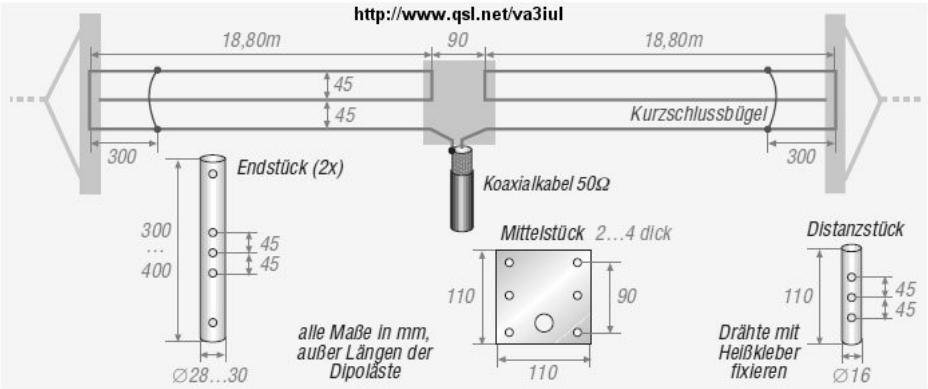

98 - ZL-Special for 20m, 15m, 10m

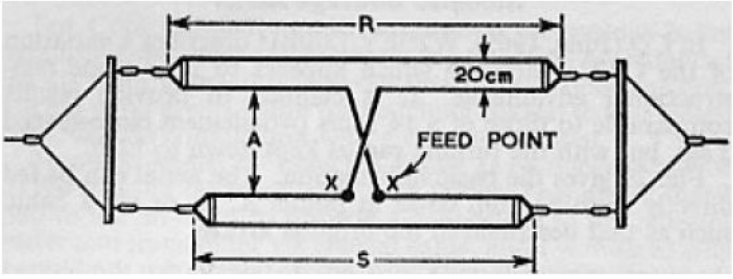

	S	R	A	A
28 Mc/s	5·09m	5·39m	1·29m	½λ
	4·17m	4·42m	1·06m	1/10λ
21 Mc/s	6·85m	7·24m	1·72m	½λ
	5·62m	5·94m	1·41m	1/10λ
14 Mc/s	10·30m	10·85m	2·58m	½λ
	8·45m	8·90m	2·12m	1/10λ

http://www.qsl.net/va3iul

99 - Biconical Antenna

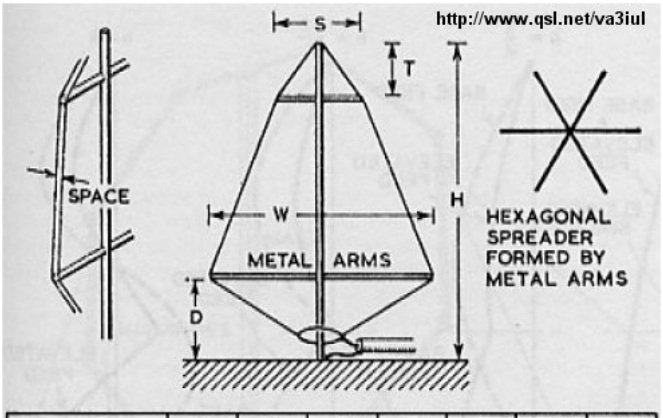

	H	W	D	T	S	SPACE	WIRE
3·5 - 15 Mc/s	43'	17'-8"	16'-10"	2'-2"	5'-10"	3"	NR 8
7 - 28 Mc/s	23'	9'-6"	9'	12"	3'-2"	2"	NR 10
14 - 56 Mc/s	12'	5'	4'-9"	8"	1'-8"	1"	NR 12

100 - Directive Delta-Birdcage Antenna for 20m to 10m

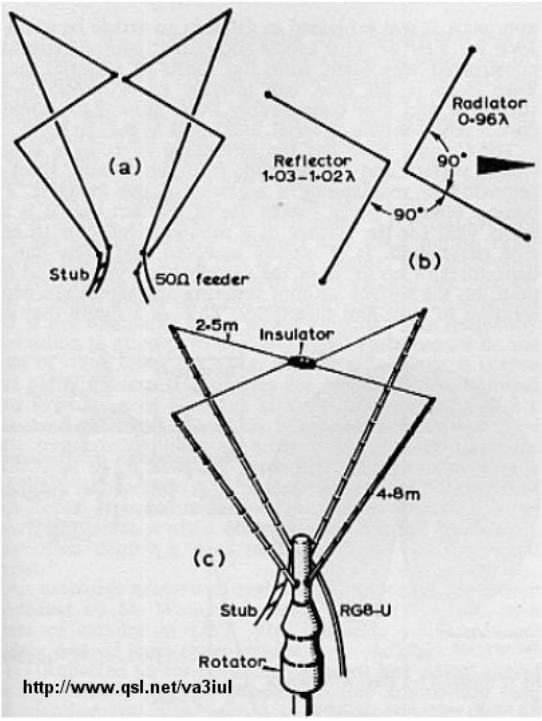

101 - Dual Polarization Antenna for 80m and 40m

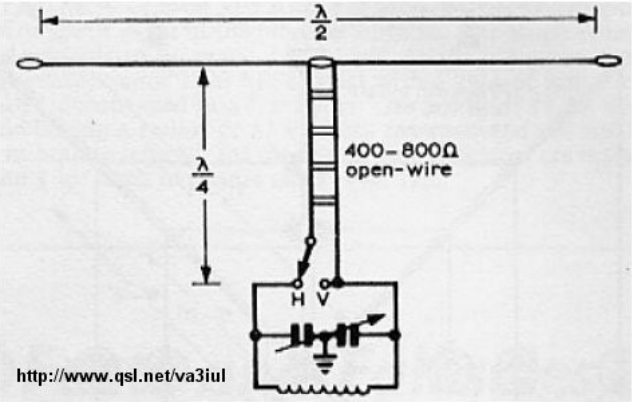

102 - Directive 300-ohm-Ribbon Folded Dipole for 15m

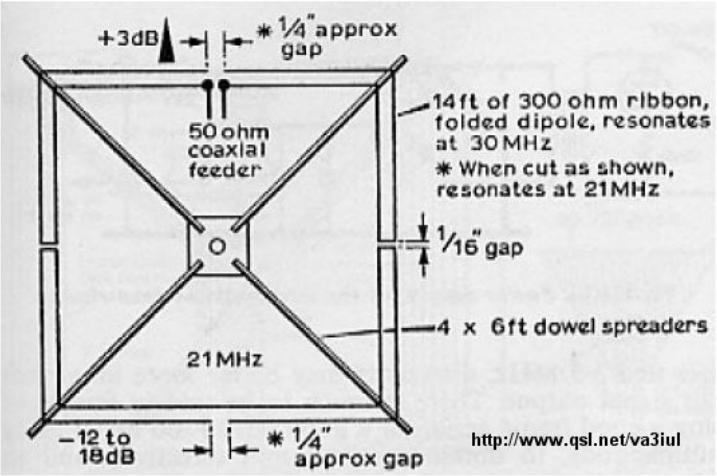

103 - Miniature Directive Antenna for 10m

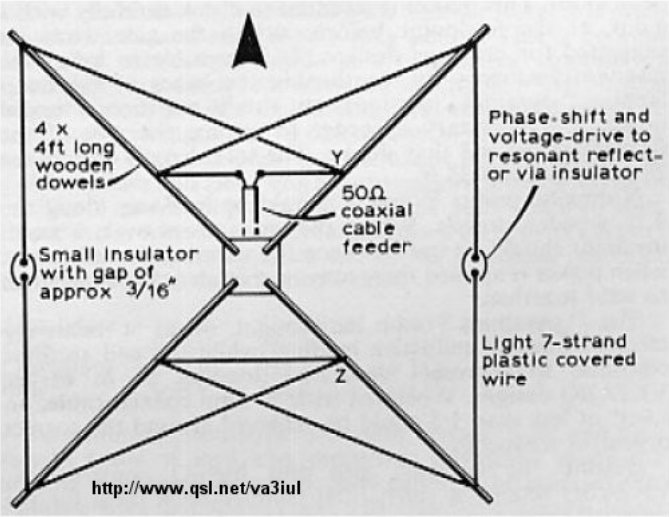

104 - Biquad Antenna 12dBi-Gain for 2.4GHz

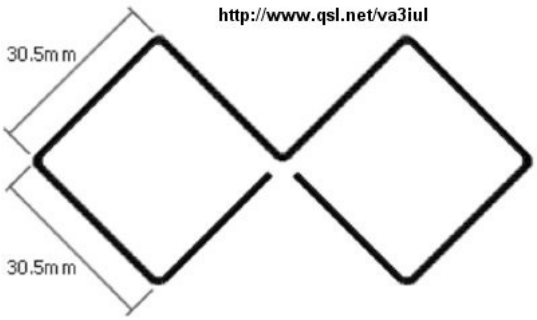

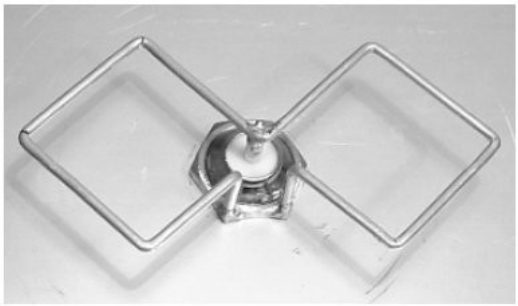

---

105 - Dual-Rhomboid Antenna for 435MHz to 870MHz

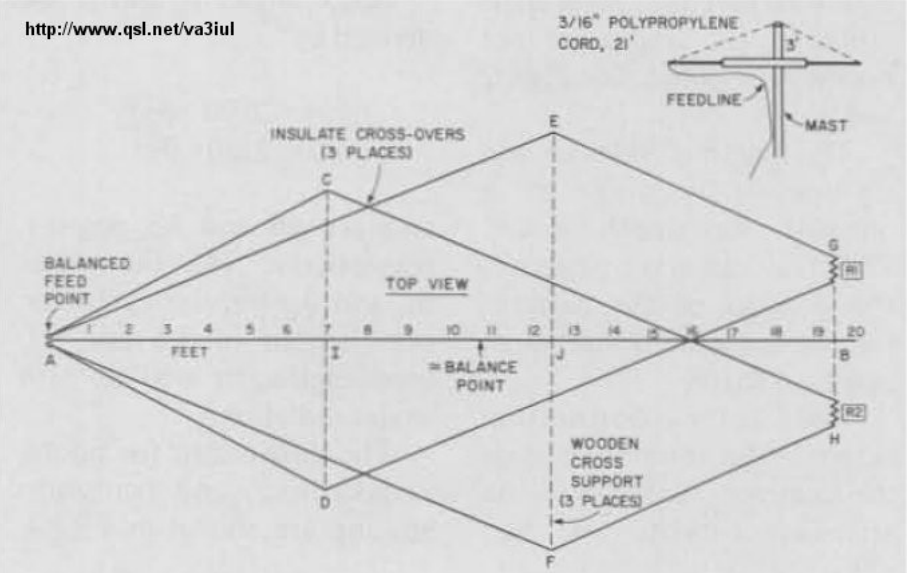

Dual rhomboid antenna for 435-870 MHz. Beamwidth ≈ 10° H x 6° V. Gain over DP ≈ 26 dB. Boom length: AB = 19'6". Support spacing : AI = 7'; IJ = 5'6"; JB = 7'. Support length: CD = 7'3"; EF = 10'3"; GH = 3'0". Rhomboid sides: AC, AD, EG, FH = 7'9.5"; AE, AF, CH, DG = 13'5.5". Feedline: Wire needed: 14 AWG formvar, ≈ 86'0". Boom material: AI, JB = wood; IJ = metal. Cross support: CD, EF, GH = wood. Terminators: R1, R2 = 600 Ohms; Watts

---

106 - Double-Bazooka Antenna for 80m

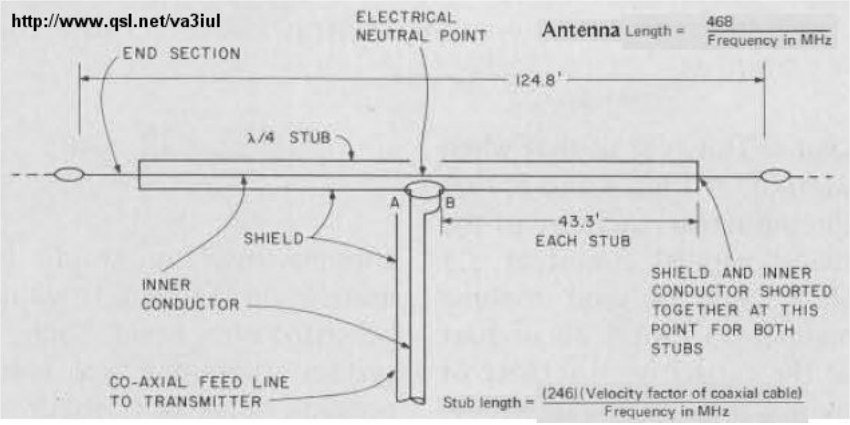

107 - J-Style Antenna

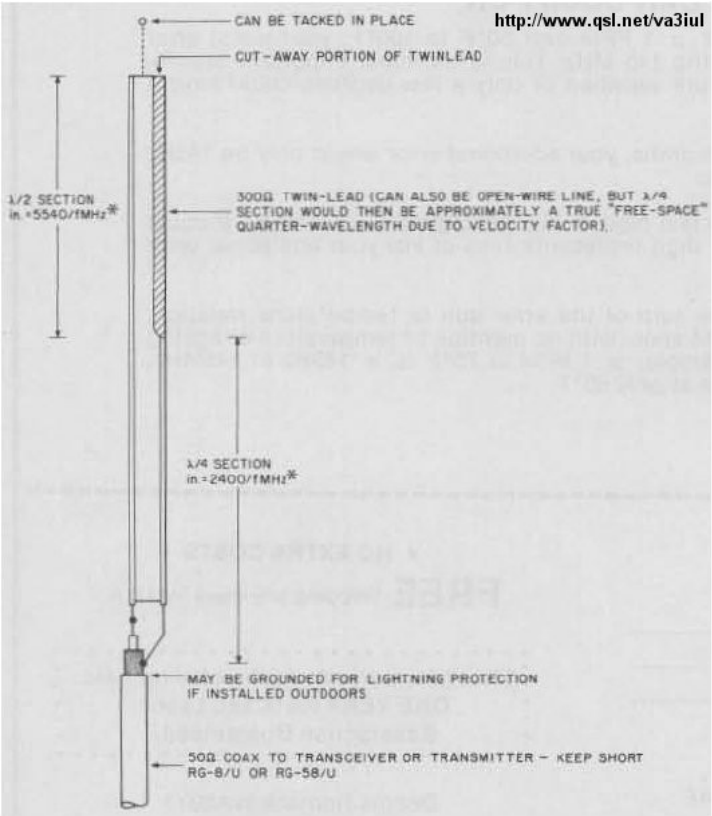

108 - Vertical / Horizontal / Circular Polarization Antenna

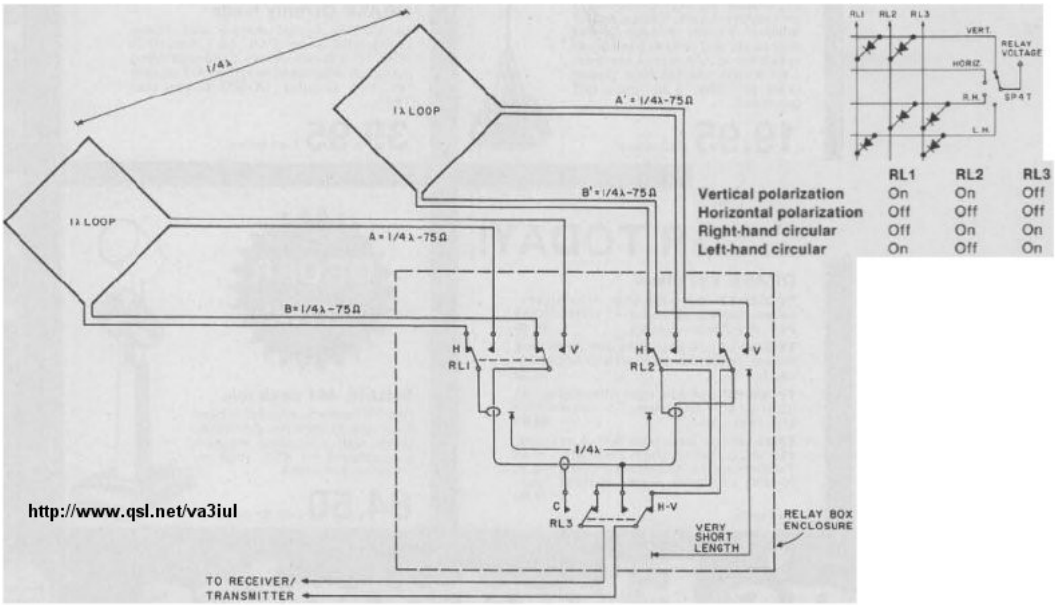

	RL1	RL2	RL3
Vertical polarization	On	On	Off
Horizontal polarization	Off	Off	Off
Right-hand circular	Off	On	On
Left-hand circular	On	Off	On

109 - Coax Inverted-L Antenna for 80m

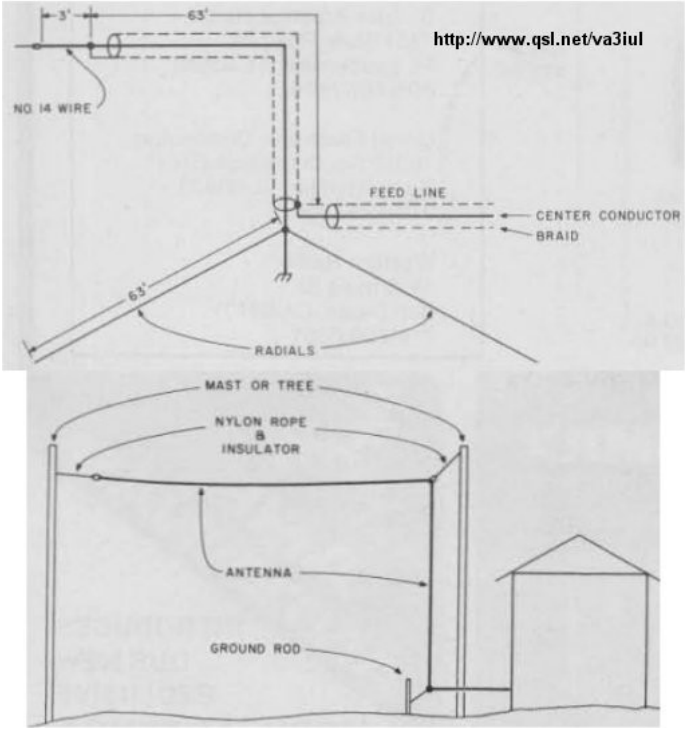

110 - Indoor Compact Loop Antenna for 80m

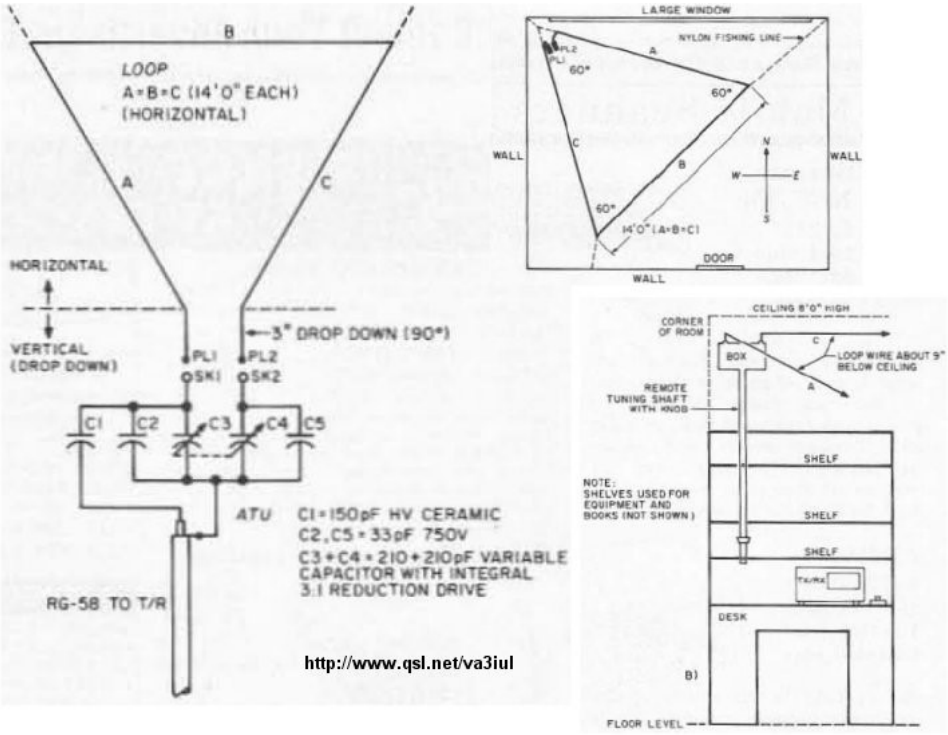

111 - Helix Antenna

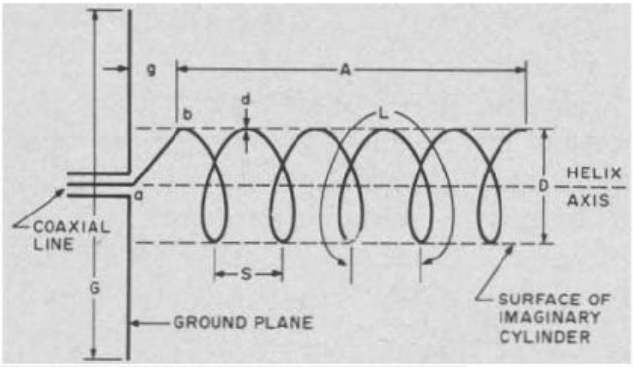

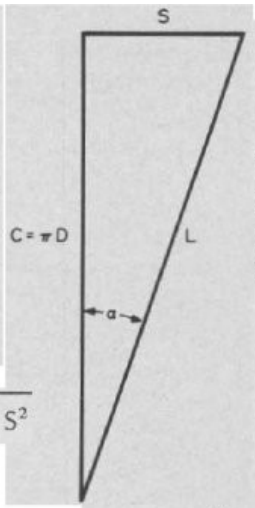

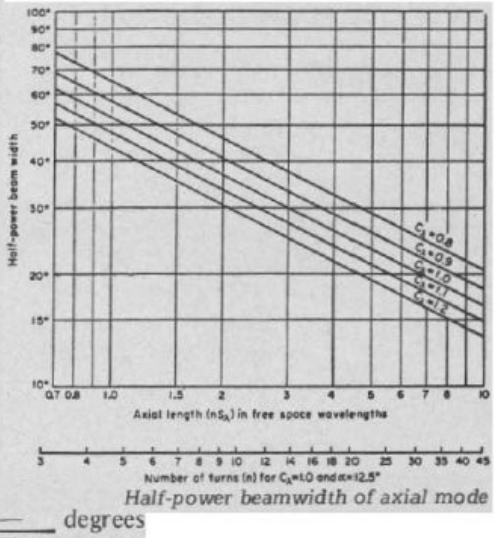

D = Diameter of the helix
S = Spacing between turns
α = Pitch angle = Arctan $\left(\frac{S}{\pi D}\right)$
L = Length of 1 turn
n = Number of turns
A = Axial length = nS
d = Diameter of conductor
g = Distance of ground plane to first turn
G = Ground plane diameter

$$L = \sqrt{(\pi D)^2 + S^2}$$

$D = 0.32\lambda$
$S = 0.22\lambda$
$G \geqslant 0.80\lambda$
$g = \frac{S}{2} = 0.12\lambda$

$$\beta = \frac{52}{C_\lambda \sqrt{nS_\lambda}} \text{ degrees}$$

http://www.qsl.net/va3iul

112 - Novice Vertical Antenna for 80m, 40m, 15m, 10m

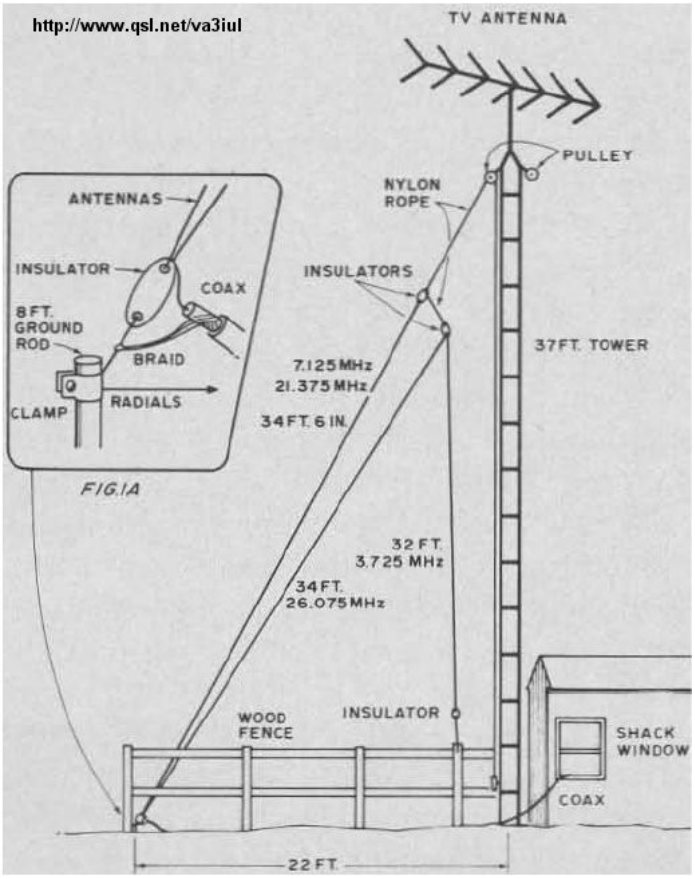

113 - Stub-Loaded Shortened Dipole for 80m

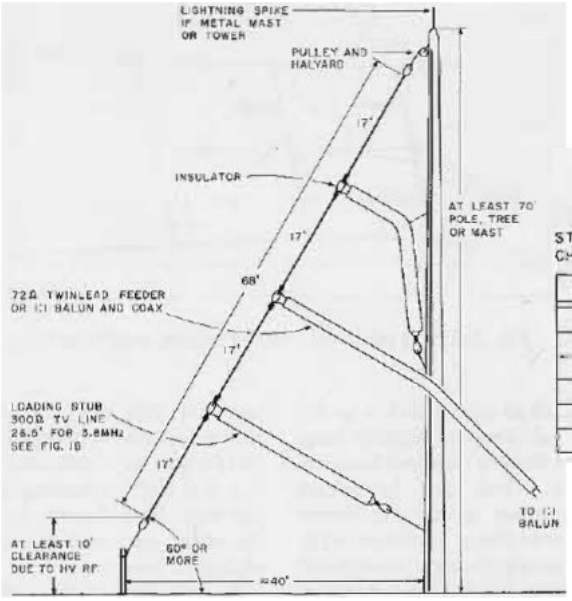

http://www.qsl.net/va3iul

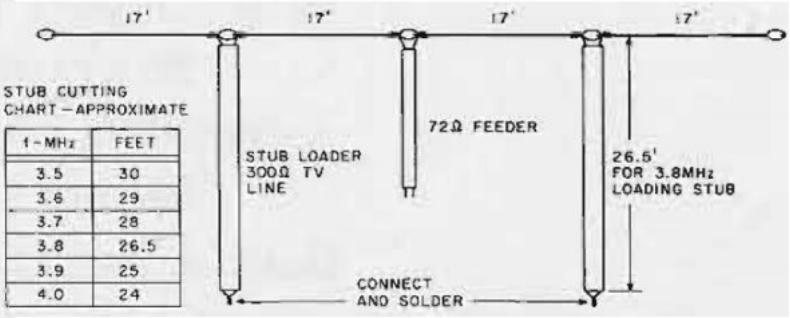

STUB CUTTING CHART – APPROXIMATE

1-MHz	FEET
3.5	30
3.6	29
3.7	28
3.8	26.5
3.9	25
4.0	24

114 - Six-Band Wire-Stub Trap Antenna for 40m-10m

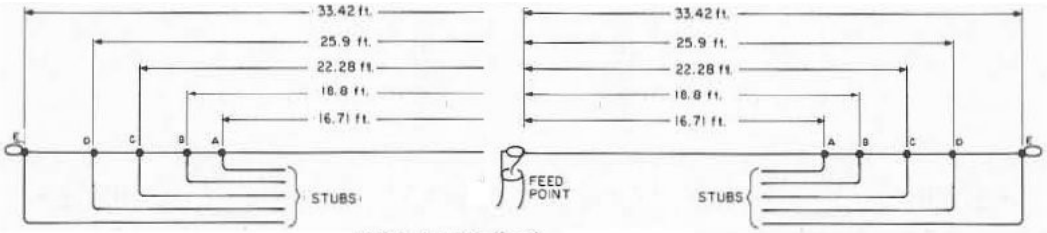

Point	Length (feet)	
A	8.37	40m
B	9.40	20m
C	11.14	17m
D	12.95	15m
E	16.72	12m
		10m

http://www.qsl.net/va3iul

115 - Multiband Half-Wave Delta-Loop Antenna

http://www.qsl.net/va3iul

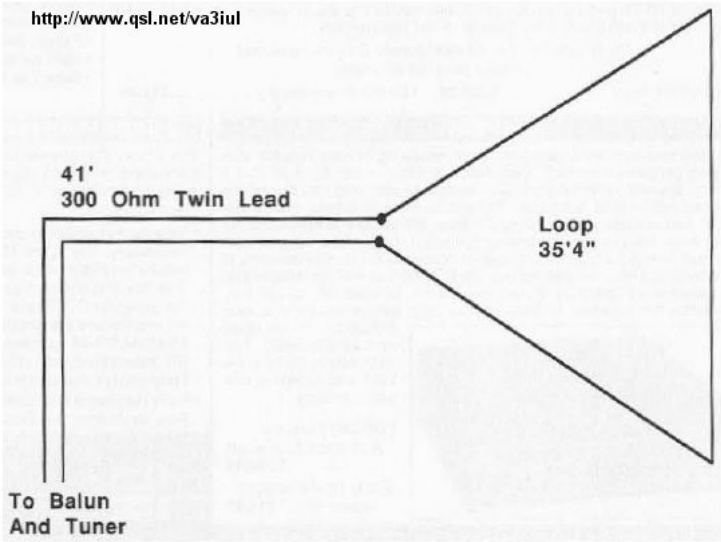

116 - Hybrid Vee for 20m, 17m

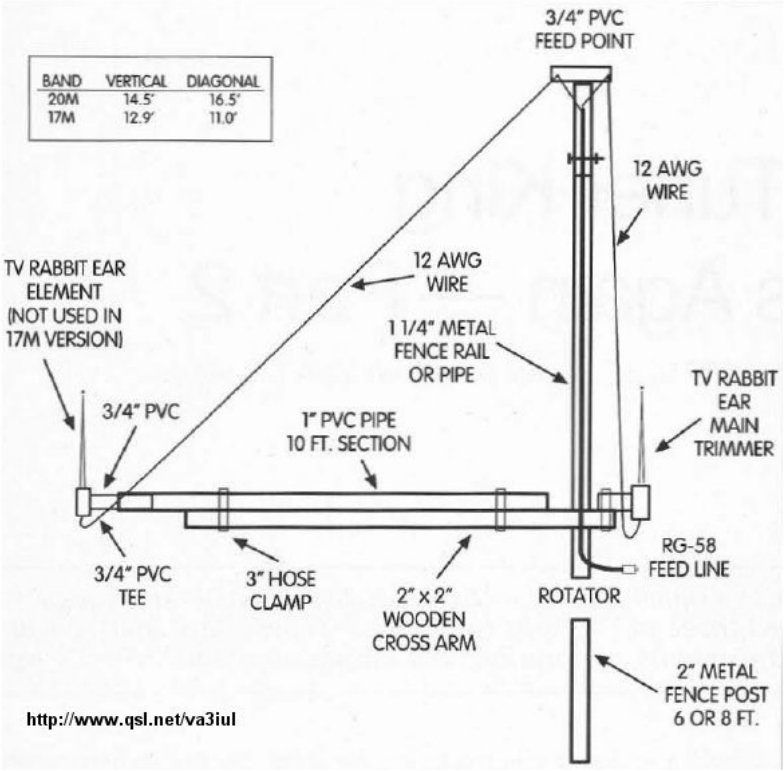

117 - Six-Shooter Array Antenna, Gain=7.5dB

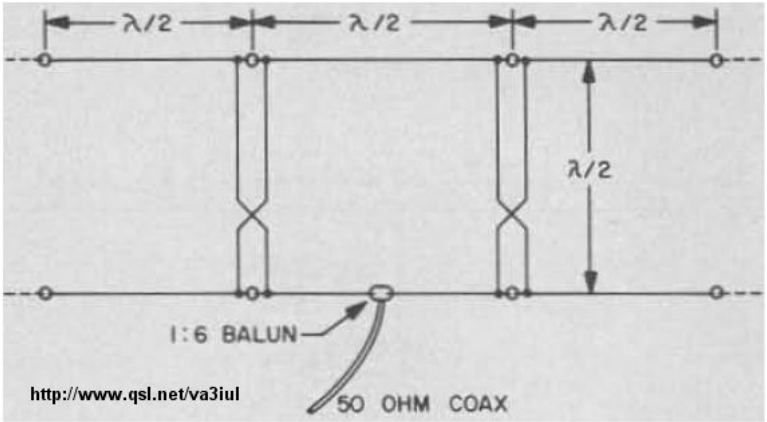

118 - Multiband Ground-Plane Antenna for 10m, 15m, 20m

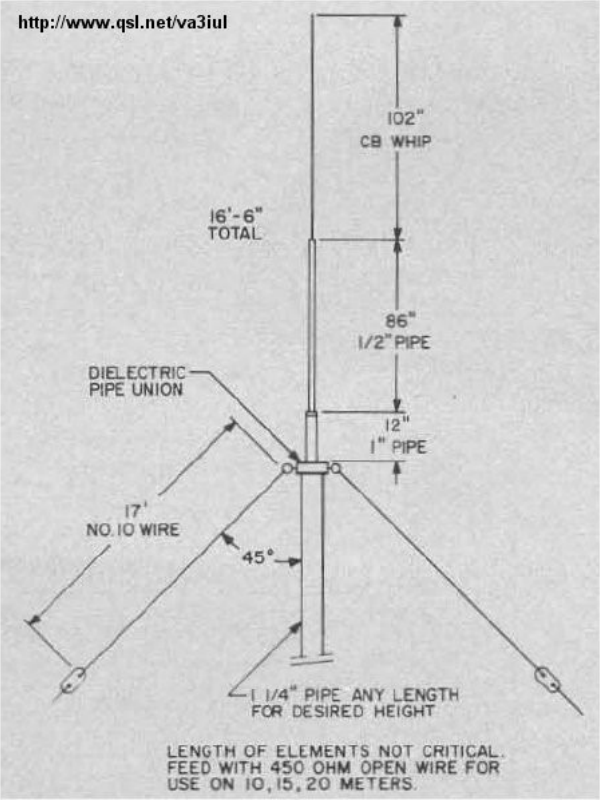

119 - Wire Superbeam Antenna for 10m, 15m, 20m

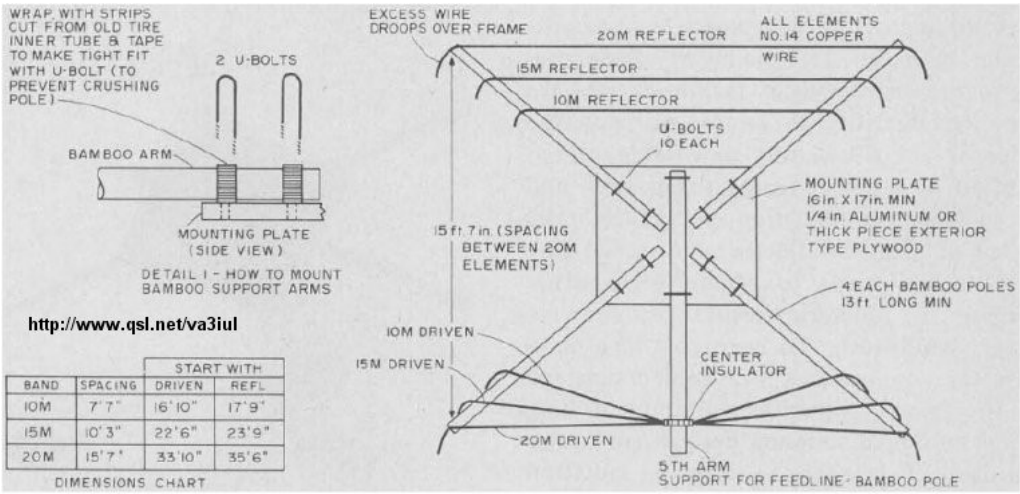

BAND	SPACING	START WITH DRIVEN	START WITH REFL
10M	7' 7"	16' 10"	17' 9"
15M	10' 3"	22' 6"	23' 9"
20M	15' 7"	33' 10"	35' 6"

DIMENSIONS CHART

120 - Two Elements Delta-Loop Antenna

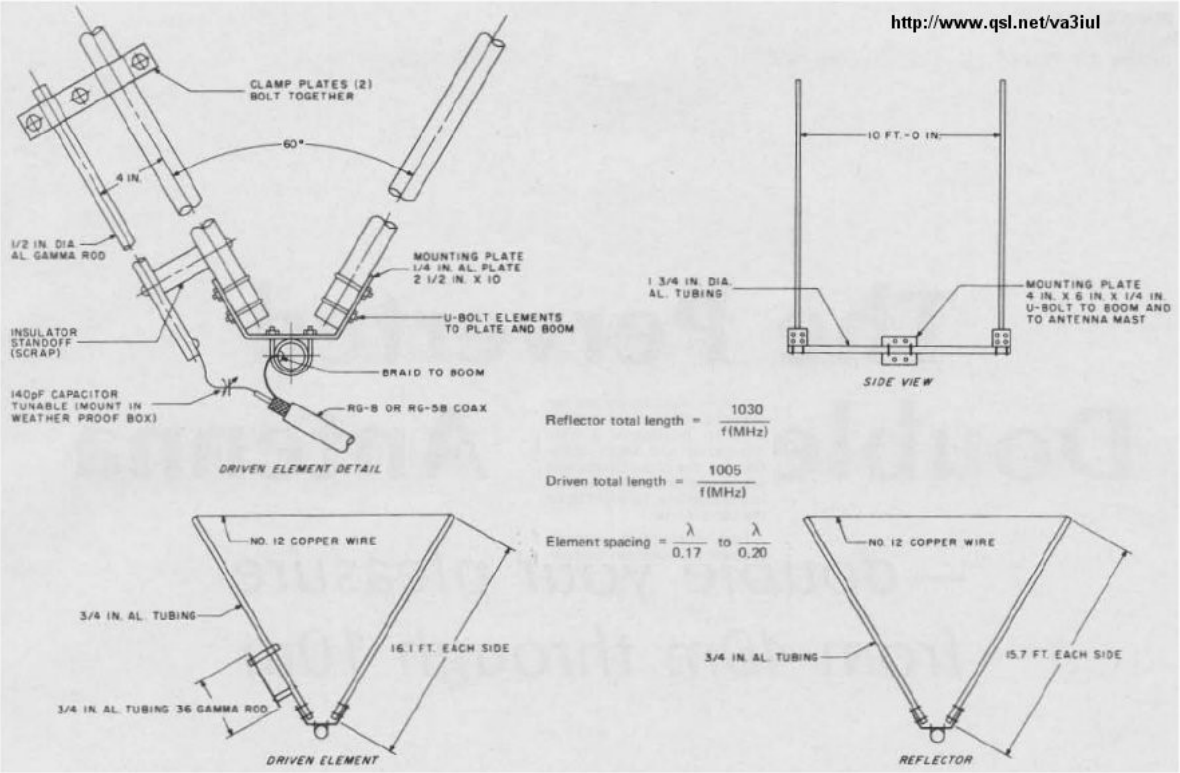

121 - Sterba Curtain Antenna

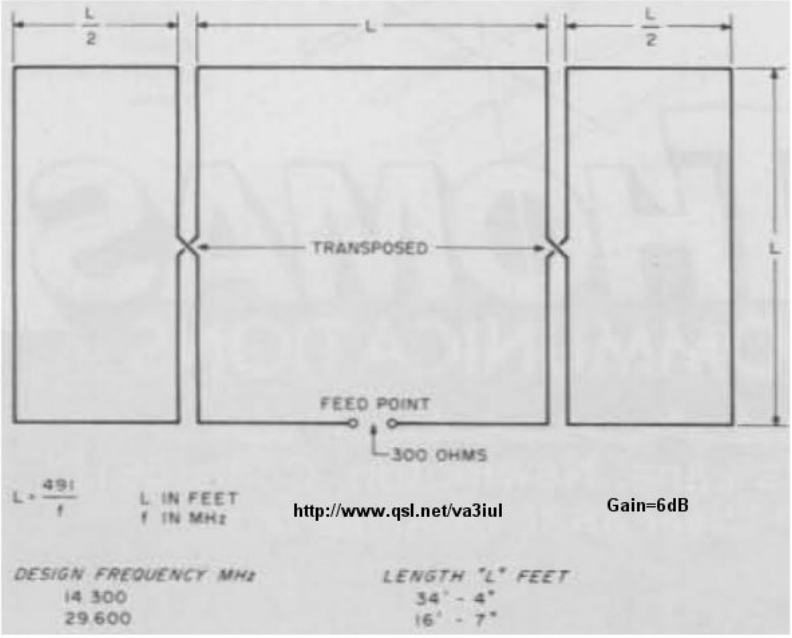

122 - Half-Wave Vertical Zepp Antenna

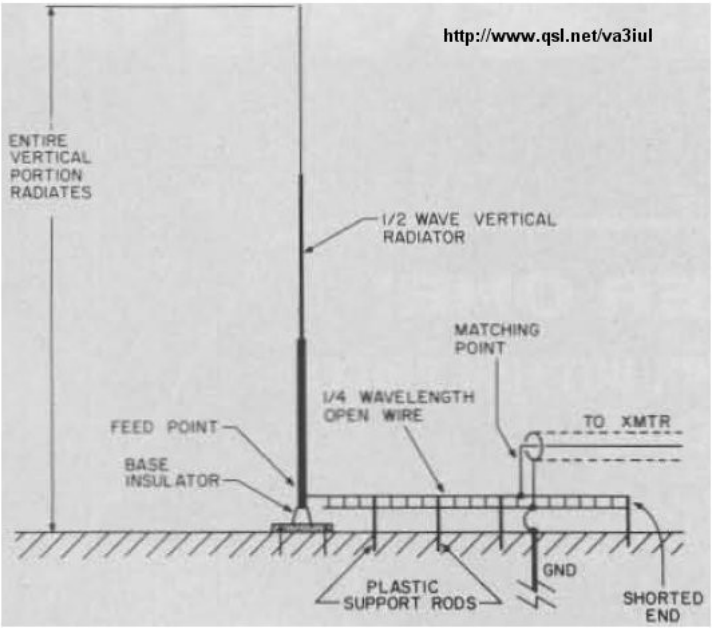

123 - Lazy-Loop Antenna for 40m

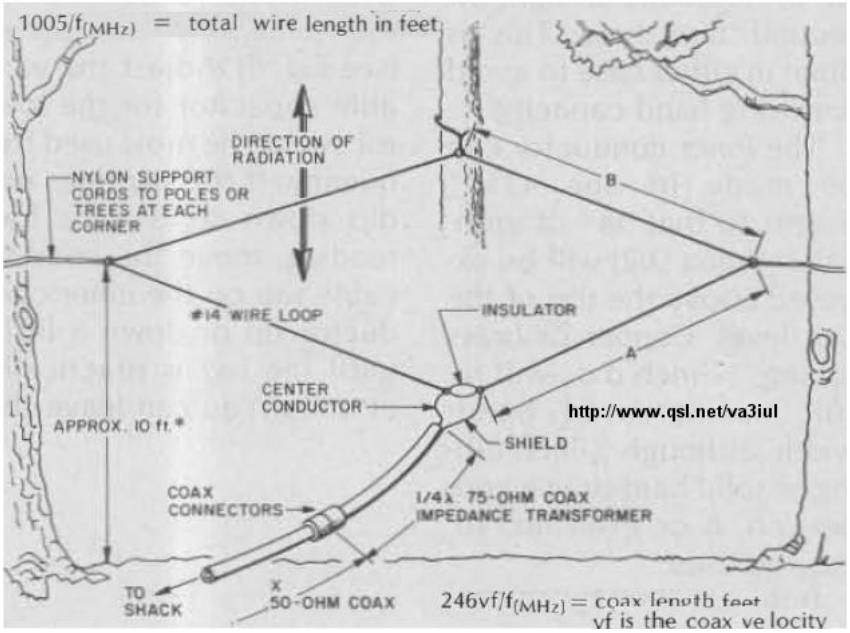

124 - Terminated Folded Dipole for 80m, 40m

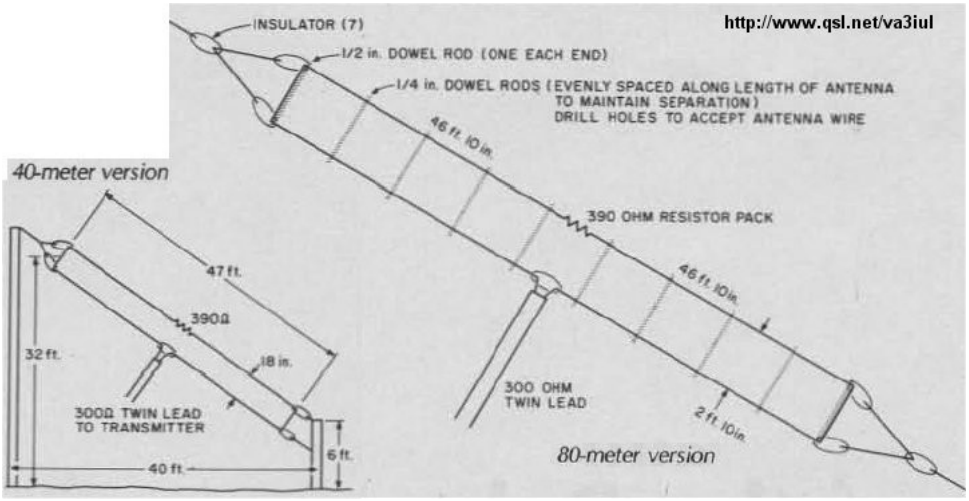

125 - Short-Fat Antenna for 15m

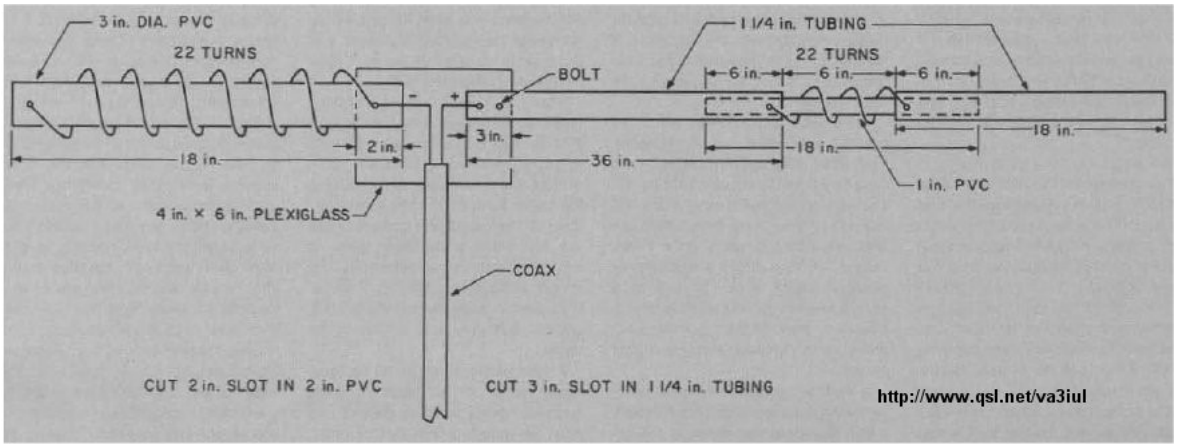

126 - Cobra Antenna for 80m

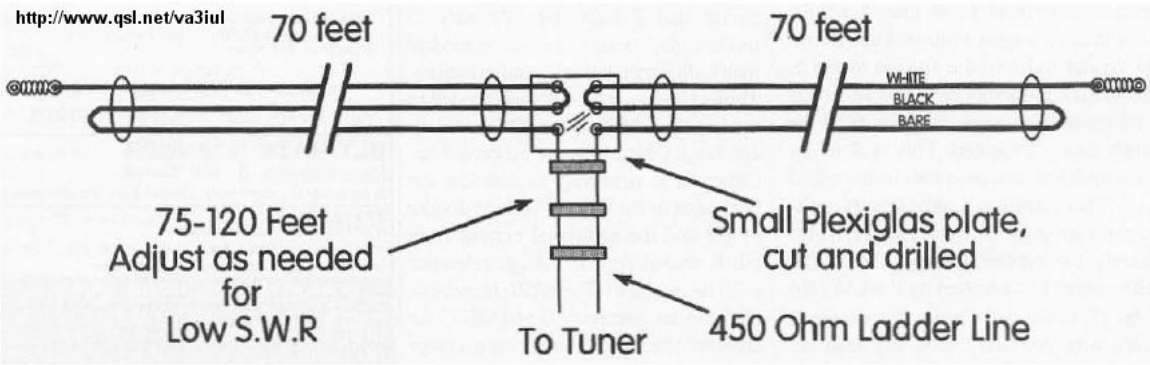

127 - Log-Periodic Wire Antenna for 20m, 15m, 10m

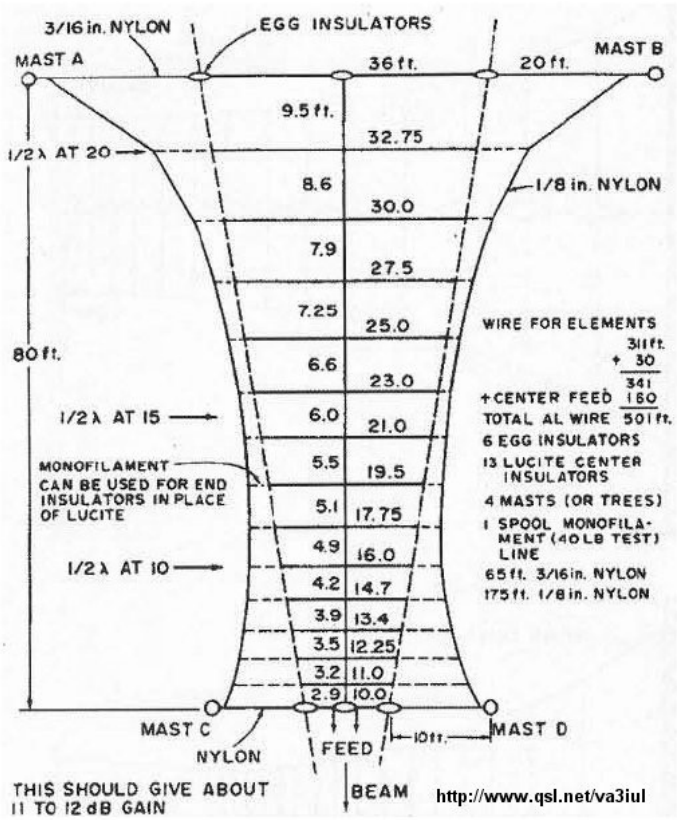

128 - 5-Element Log-Periodic Vertical Antenna for 80m, 40m, 20m

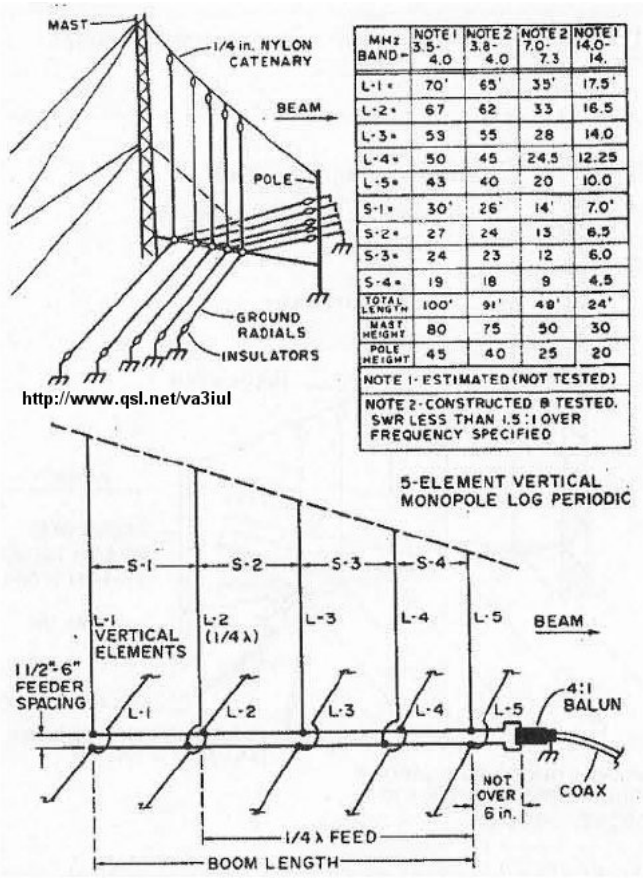

MHz BAND →	NOTE 1 3.5-4.0	NOTE 2 3.8-4.0	NOTE 2 7.0-7.3	NOTE 1 14.0-14.
L-1 *	70'	65'	35'	17.5'
L-2 *	67	62	33	16.5
L-3 *	59	55	28	14.0
L-4 *	50	45	24.5	12.25
L-5 *	43	40	20	10.0
S-1 *	30'	26'	14'	7.0'
S-2 *	27	24	13	6.5
S-3 *	24	23	12	6.0
S-4 *	19	18	9	4.5
TOTAL LENGTH	100'	91'	48'	24'
MAST HEIGHT	80	75	50	30
POLE HEIGHT	45	40	25	20

NOTE 1 - ESTIMATED (NOT TESTED)

NOTE 2 - CONSTRUCTED & TESTED. SWR LESS THAN 1.5 : 1 OVER FREQUENCY SPECIFIED

http://www.qsl.net/va3iul

129 - 2m Vertical Wire Antennas

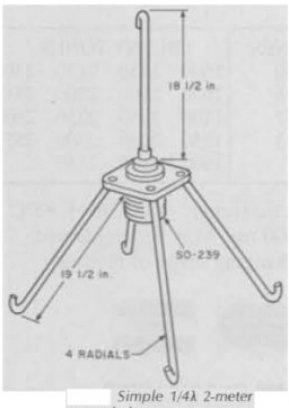

Simple 1/4λ 2-meter ground-plane antenna.

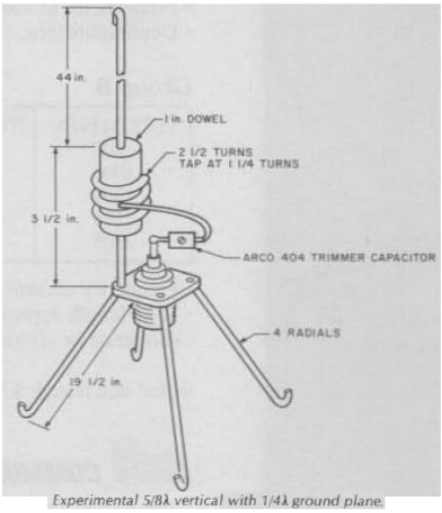

Experimental 5/8λ vertical with 1/4λ ground plane.

http://www.qsl.net/va3iul

130 - Earth-Mover Inverted-V Antenna for 40m

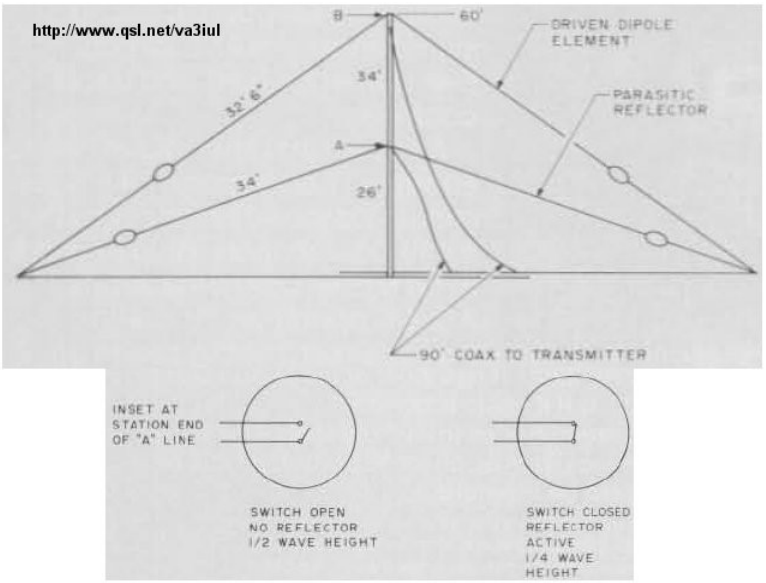

131 - Coax-Cable Collinear Antennas

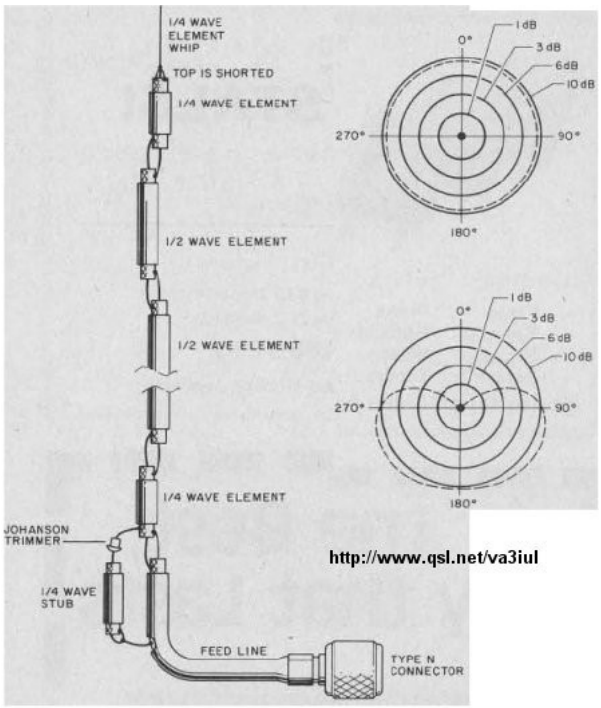

8 elements = 6 dB. 16 elements = 9 dB

132 - Double Bobtail Antenna for 20m

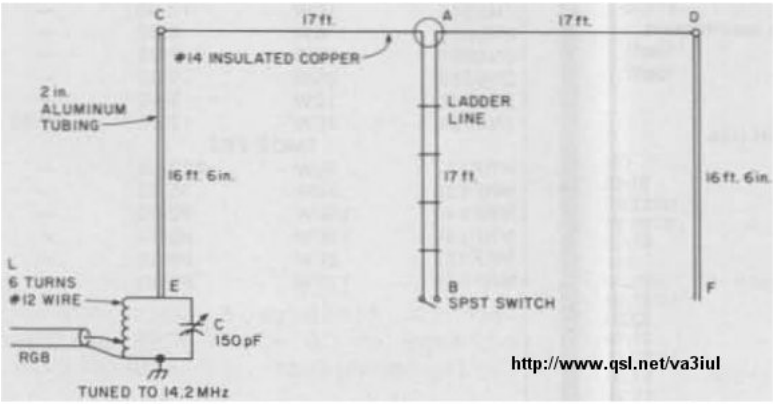

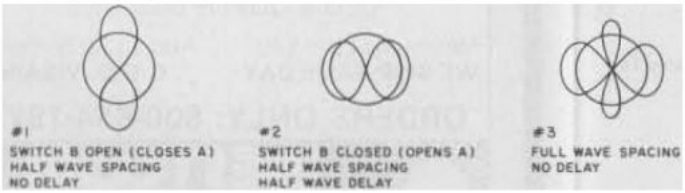

133 - Collinear Zepp Antenna

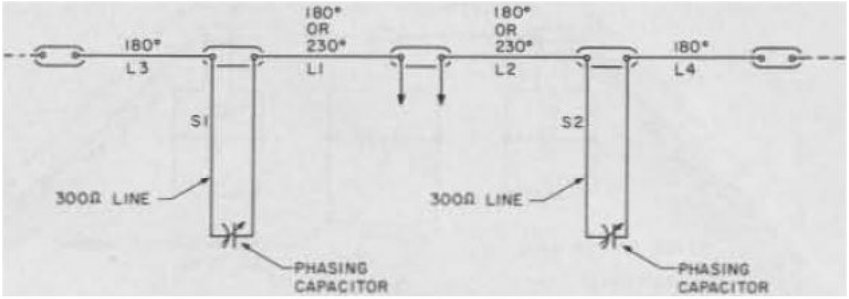

L1 - L2 = 180° - 468/f WHERE f = MHz
L1 - L2 = 230° - 600/f WHERE f = MHz

S1 - S2 = 246 × 0.82/f WHERE f = MHz
S1 - S2 MADE FROM 300Ω TV RIBBON.
MAKE ABOUT 6 inches LONGER THAN
CALCULATED VALUES. TRIM IF NECESSARY.

http://www.qsl.net/va3iul

134 - Taylor Vee Antenna for 20m

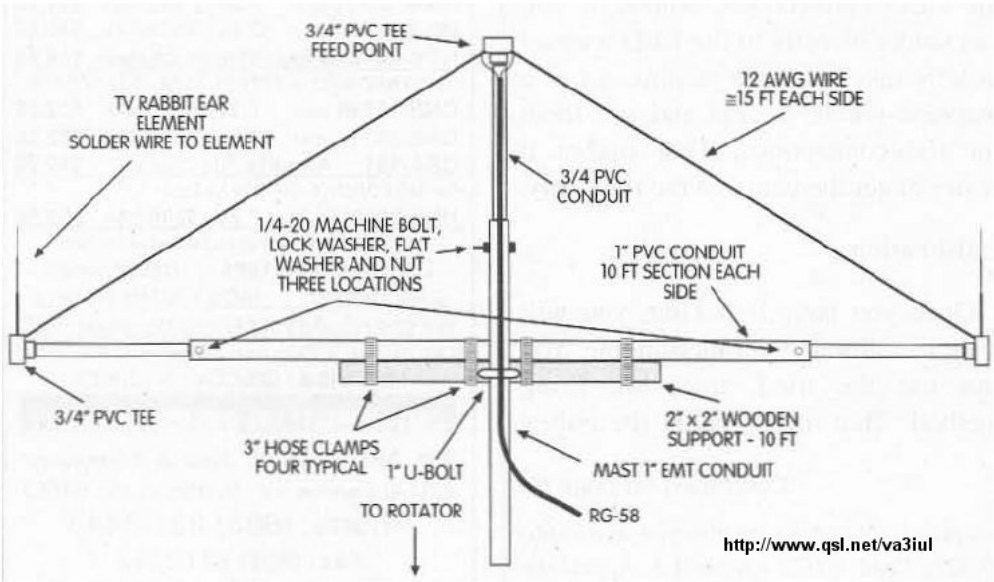

135 - Collinear Vertical Antenna 6dB-Gain for 2m, 1.3m, 73cm

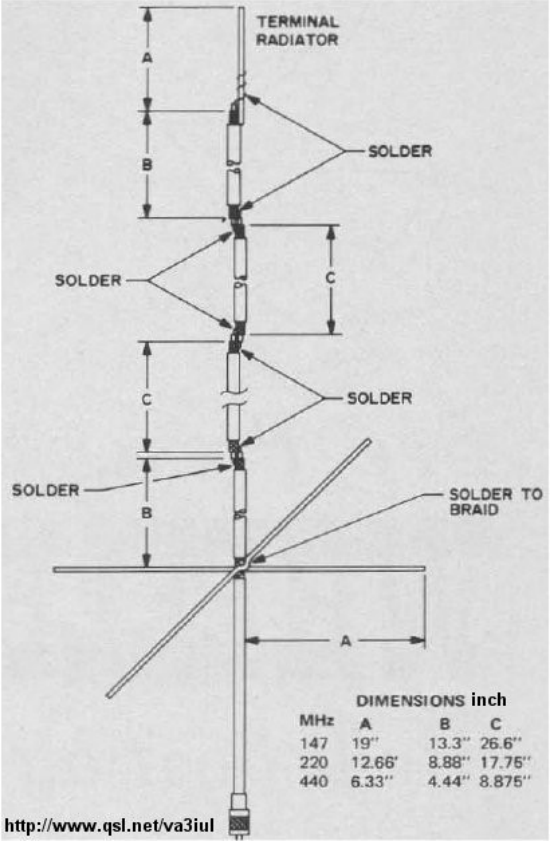

136 - Bi-Loop Antenna for 20m

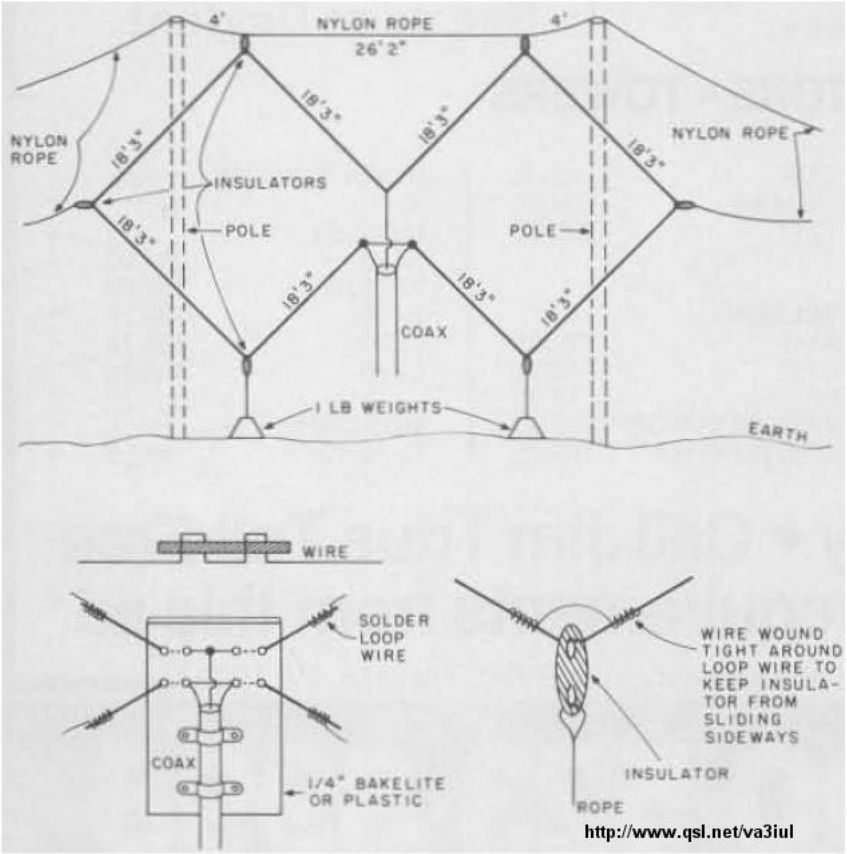

137 - Wire Beam 6dBd-Gain for 10m

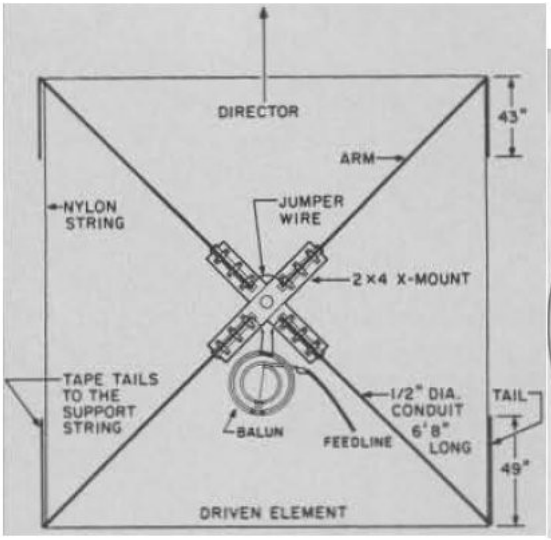

http://www.qsl.net/va3iul

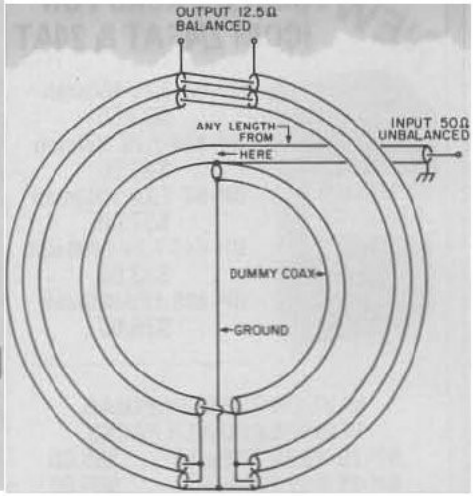

138 - Sloping Diamond Antenna 4dB-Gain for 40m

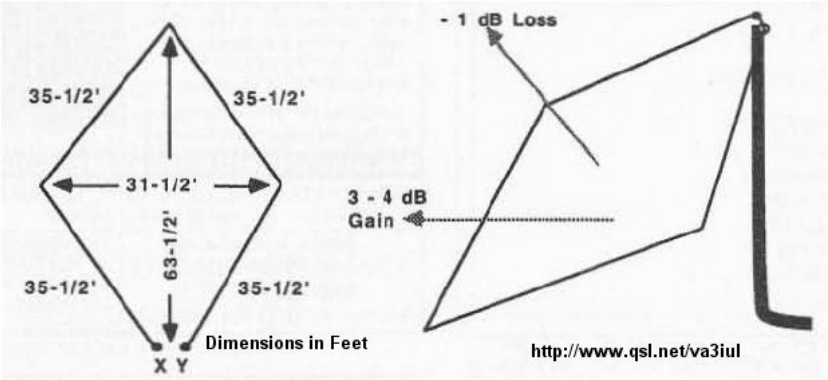

139 - Twisted Loop Antenna for 160m

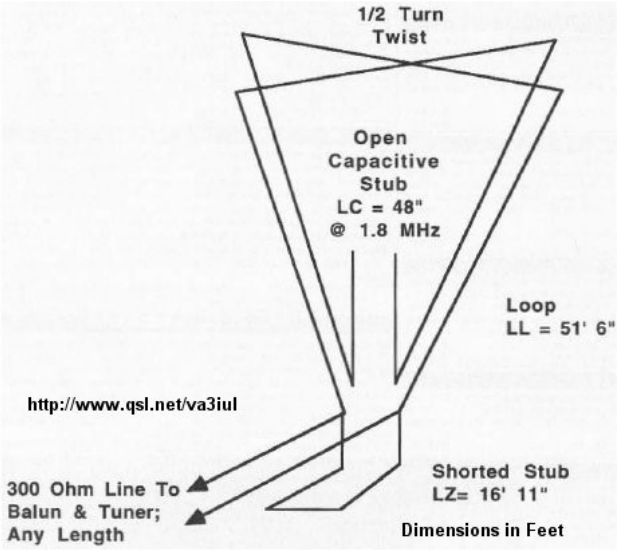

140 - DX RX Loop Antenna for 160m

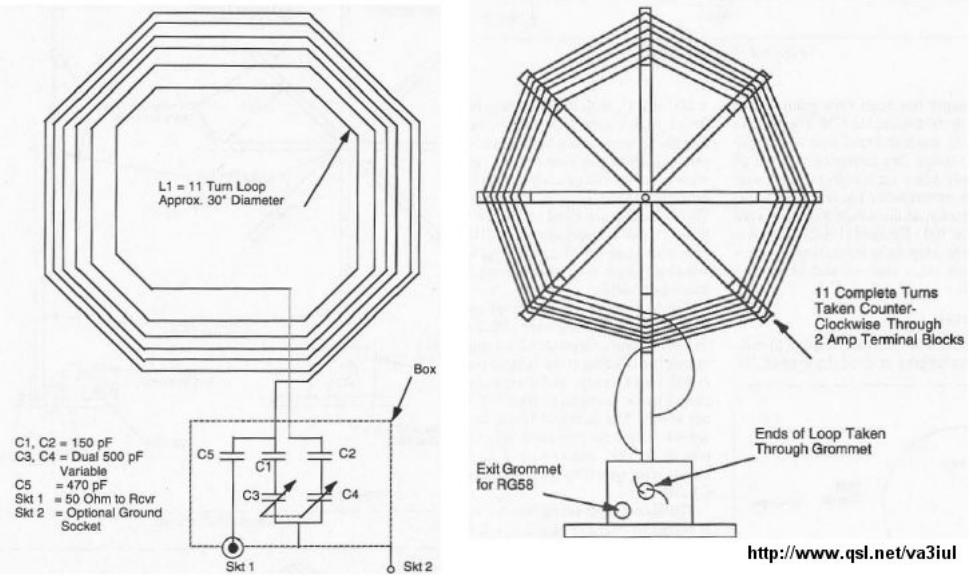

141 - Hentenna 3dB-Gain for 10m, 6m, 2m

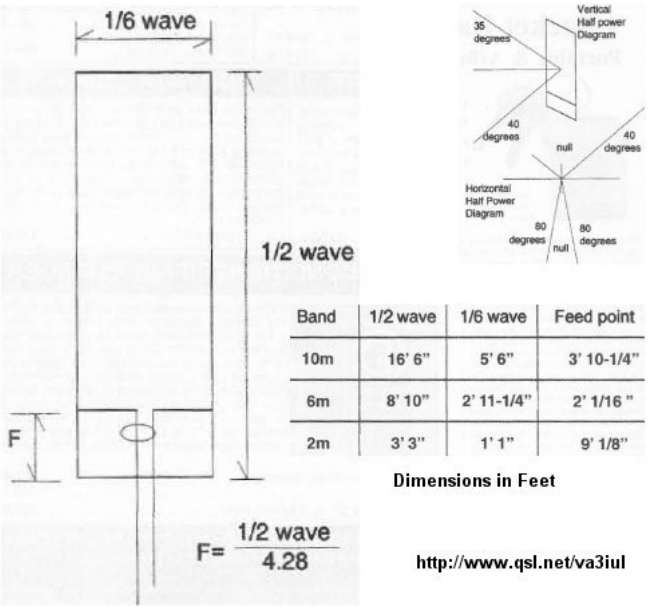

Band	1/2 wave	1/6 wave	Feed point
10m	16' 6"	5' 6"	3' 10-1/4"
6m	8' 10"	2' 11-1/4"	2' 1/16 "
2m	3' 3"	1' 1"	9' 1/8"

Dimensions in Feet

http://www.qsl.net/va3iul

142 - VK2AAR Wire Antenna for 20m

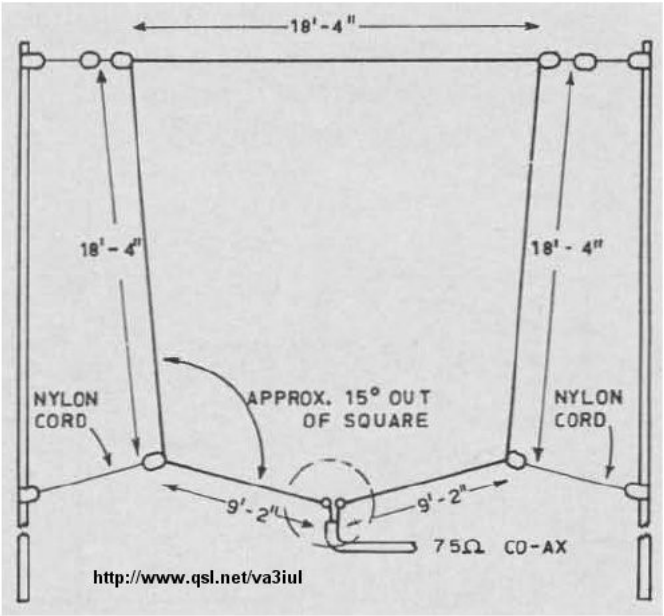

143 - 2-Elements Quad Antenna for 6m

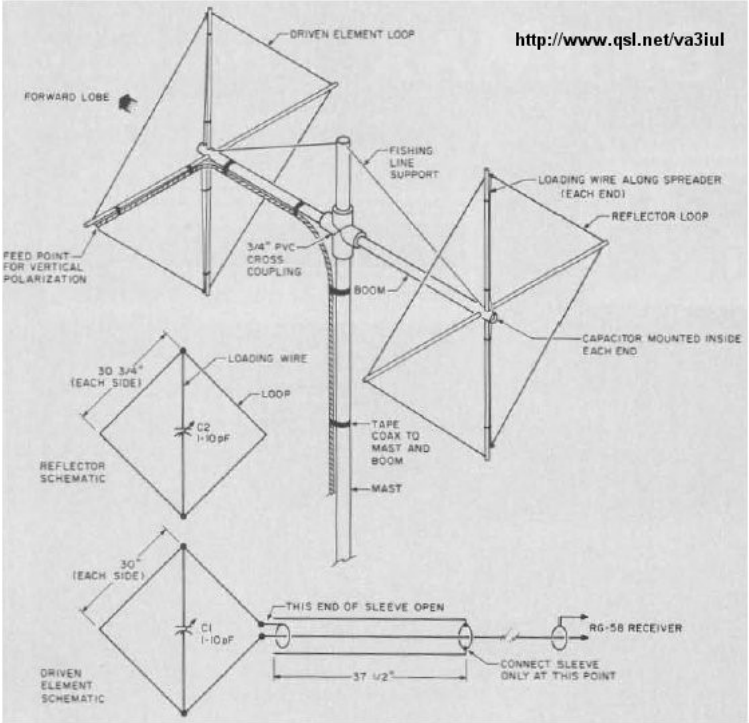

144 - Hula-Loop Bidirectional 6dB-Gain Antenna for 17m

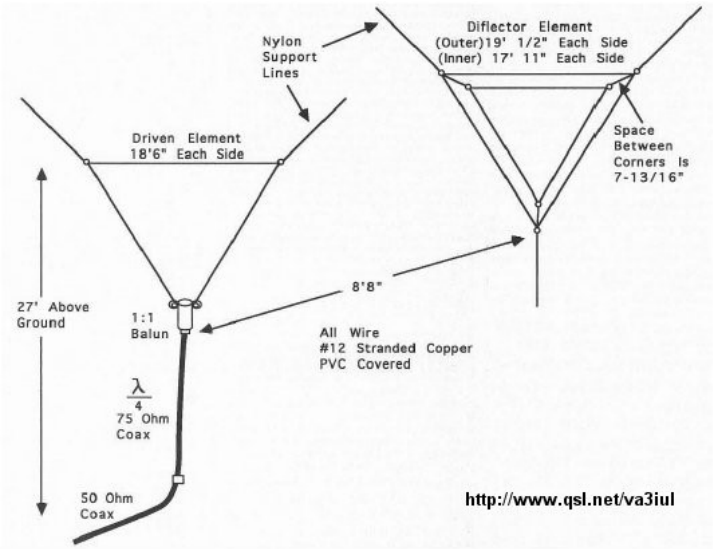

145 - Moxon Rectangle Beam for 15m-10m

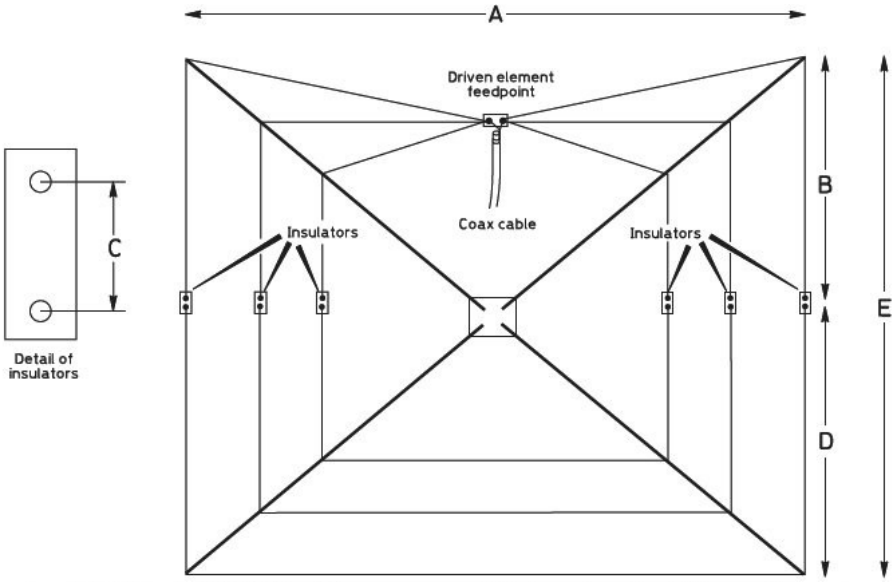

A = 98.26/f = (m); 322/f = (ft)
E = 53.96/f = (m); 177/f = (ft)
56.09/f = length of diagonal in metres
184/f = diagonal length in ft.
C = 560mm (22in) for 14MHz, 380mm (15in) for 21MHz and 250mm (10in) for 28MHz

http://www.qsl.net/va3iul

146 - Double-D Beam 4dB-Gain

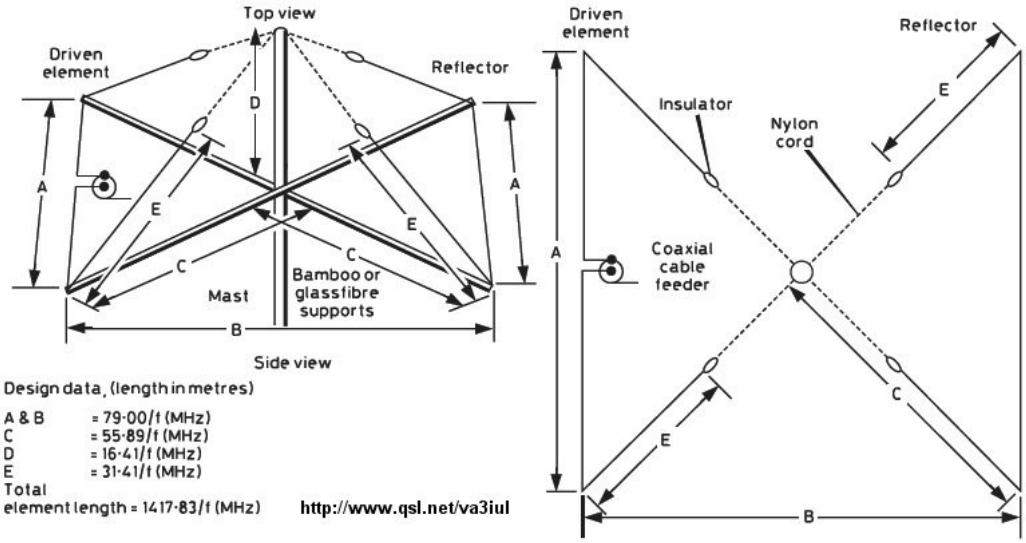

Design data, (length in metres)

A & B	= 79·00/f (MHz)
C	= 55·89/f (MHz)
D	= 16·41/f (MHz)
E	= 31·41/f (MHz)
Total element length	= 1417·83/f (MHz)

http://www.qsl.net/va3iul

147 - KE4PT OCEF All-Band Dipole

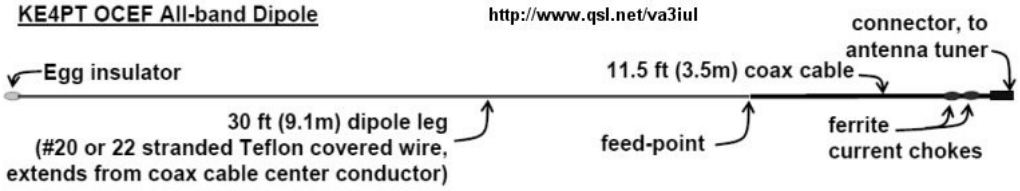

KE4PT Off center end fed (OCEF) All-band Dipole

Lengths are not critical, as long as they are not near a half wavelength on any frequency used.
Dipole radiating length is 30+11.5=41.5 ft, or 12.6 m.
Coax cable may be 50 or 75 ohm on left side of connector, short 50 ohm coax to antenna tuner.
Use antenna tuner for operation on any ham band 40m – 6m.
May be hung by Egg insulator at one end, or draped and drooped over a fiberglass pole.

148 - Wire Quad Antenna for 40m

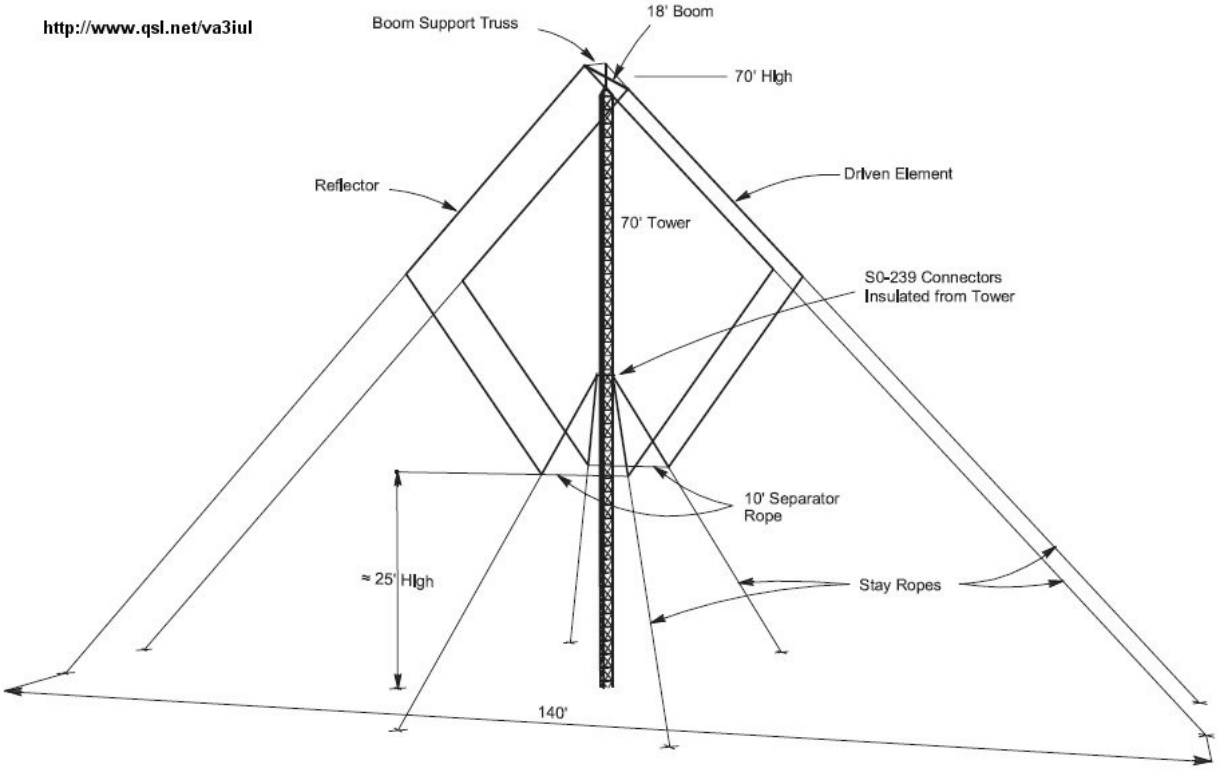

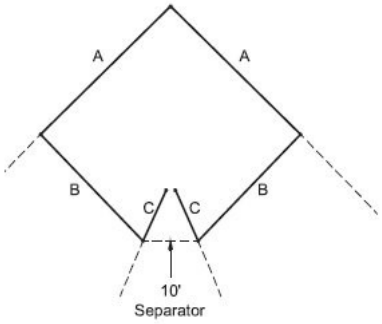

	7050 kHz, CW	*7200 kHz, SSB*
Length A, Reflector	31"6"	30"10-¾"
Length B, Reflector	28"2-¼"	27"7"
Length C, Reflector	15"7-¼"	15"
Total, Half Reflector	75"3-½"	73"5-¾"
Resonant Frequency	7030 kHz	7205 kHz
Length A, Driven	30"7-¼"	30"
Length B, Driven	27"3-½"	26"8-½"
Length C, Driven	14"7-½"	14"
Length, Half Driven	72"6-¼"	70"8-½"
Self-Resonant Frequency	7295 kHz	7480 kHz

---

149 - Inclined Dipole Antenna for 80m, 40m

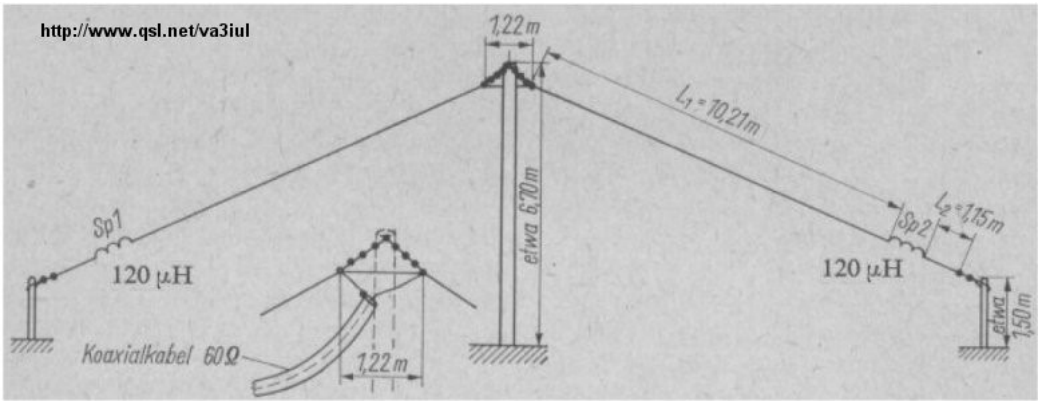

---

150 - Pyramidal Wire Antenna for 80m

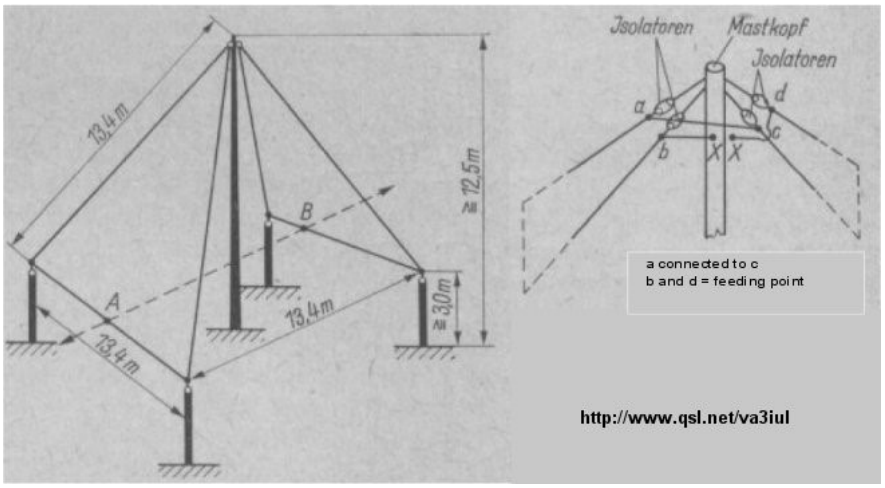

151 - Random Wire Antenna All Bands

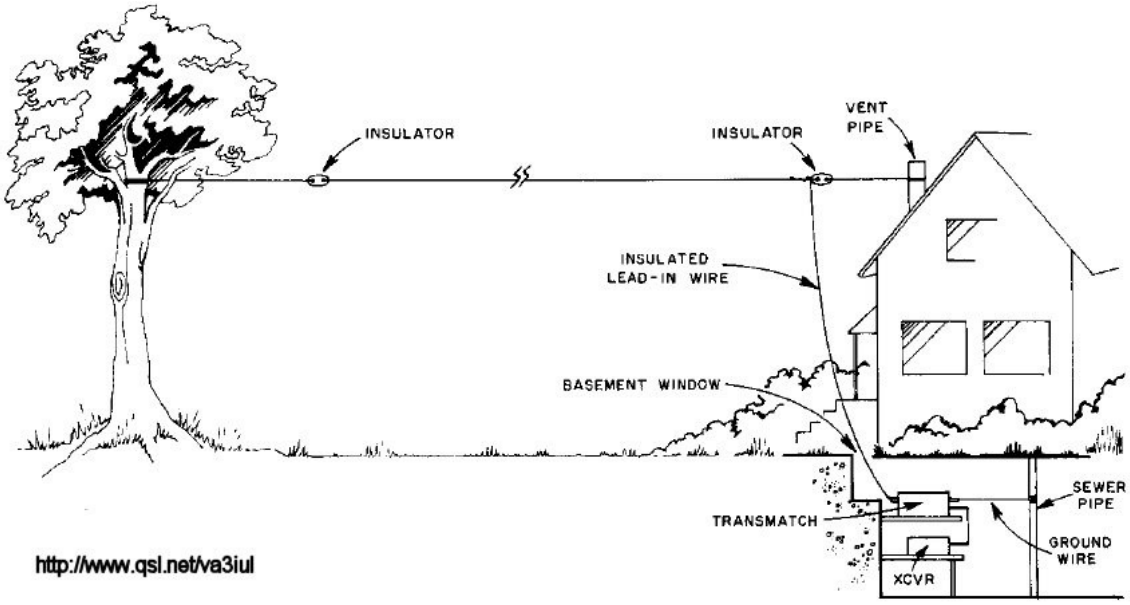

152 - Multiband Dipole Antenna for 80m, 40m,15m, 10m

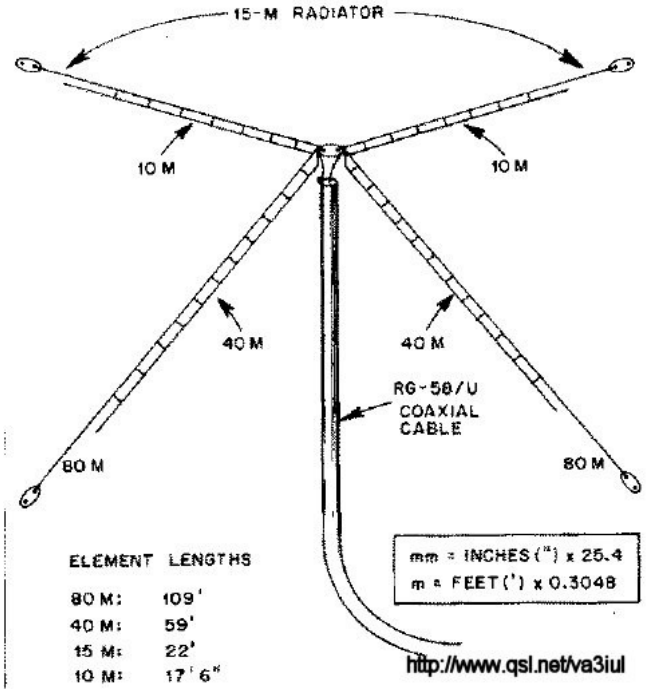

153 - Slim Jim Wire Antenna for 4m

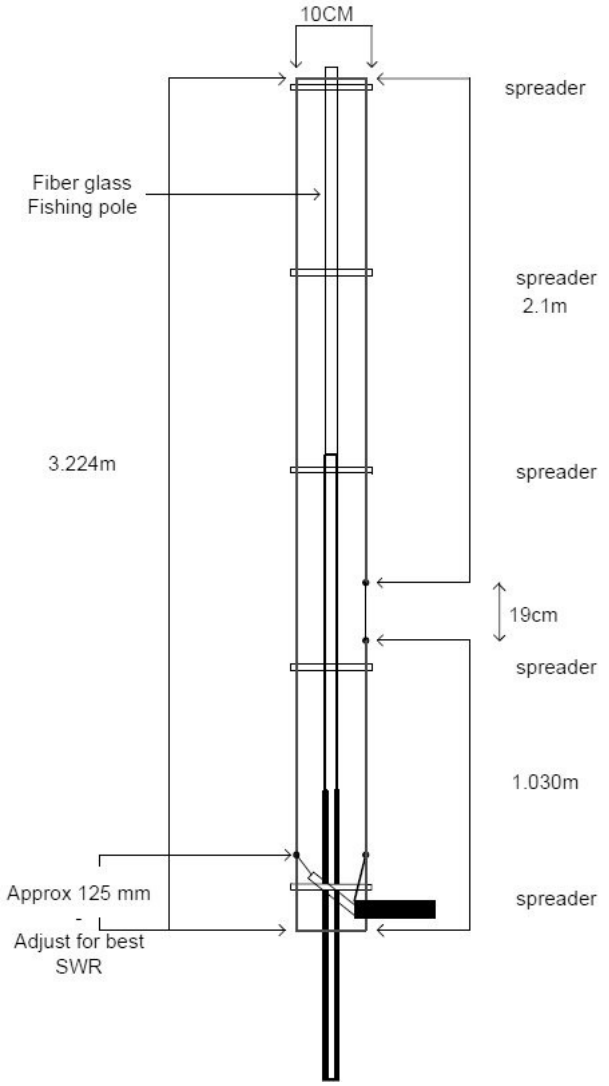

http://www.qsl.net/va3iul

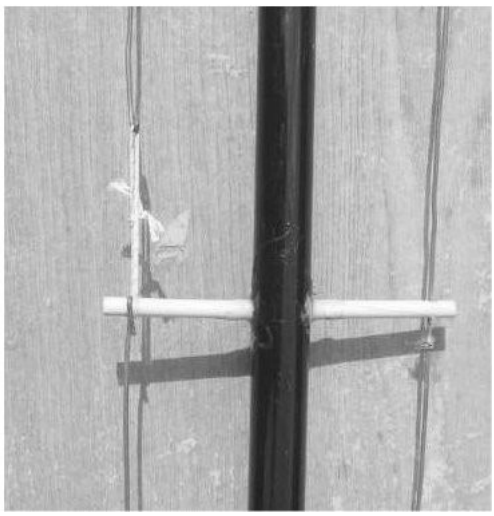

---

154 - Delta Loop for 6m

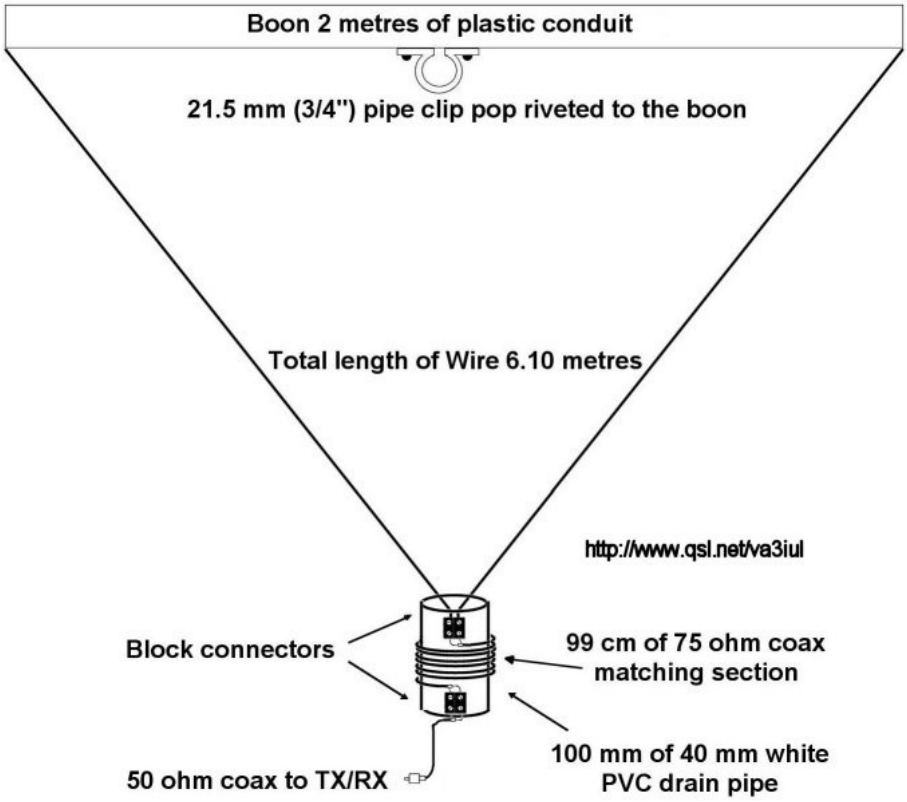

155 - Re-Configurable Antenna for 160m and 80m

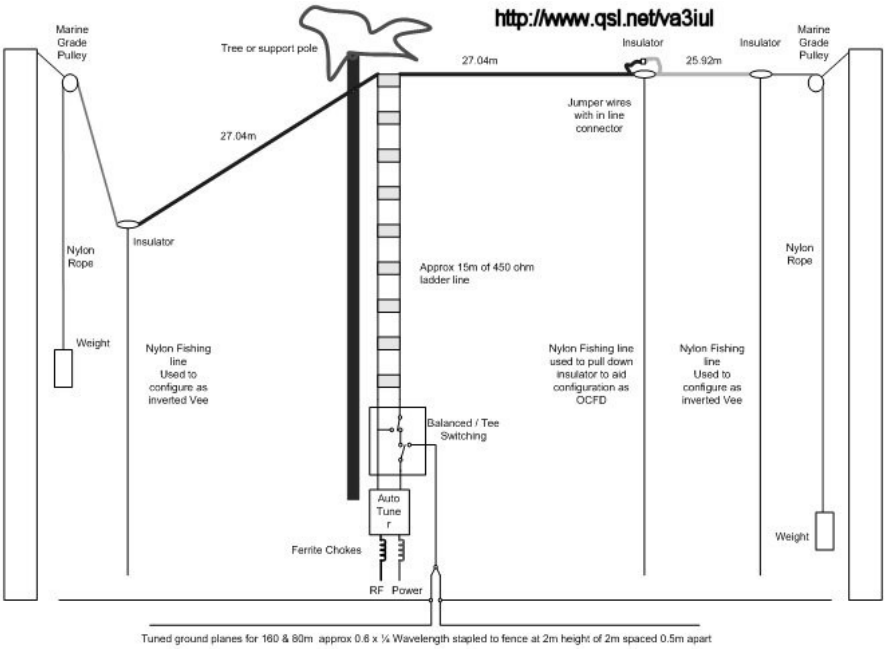

156 - Very Low Frequency Inverted-L Antenna

f(kc)	X (ohms)	CALCULATED Rrad (ohms)
45	-j 785	0.49
50	690	0.60
60	555	0.85
70	450	1.20
80	375	1.55
90	320	2.00
100	268	2.40
120	188	3.6
140	125	5.2
160	75	7.2
180	30	9.9
195	0	12.8

http://www.qsl.net/va3iul

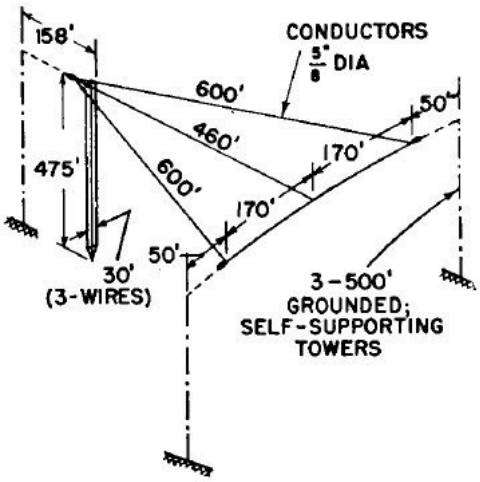

157 - Reduced Size Half Sloper Antenna for 160m

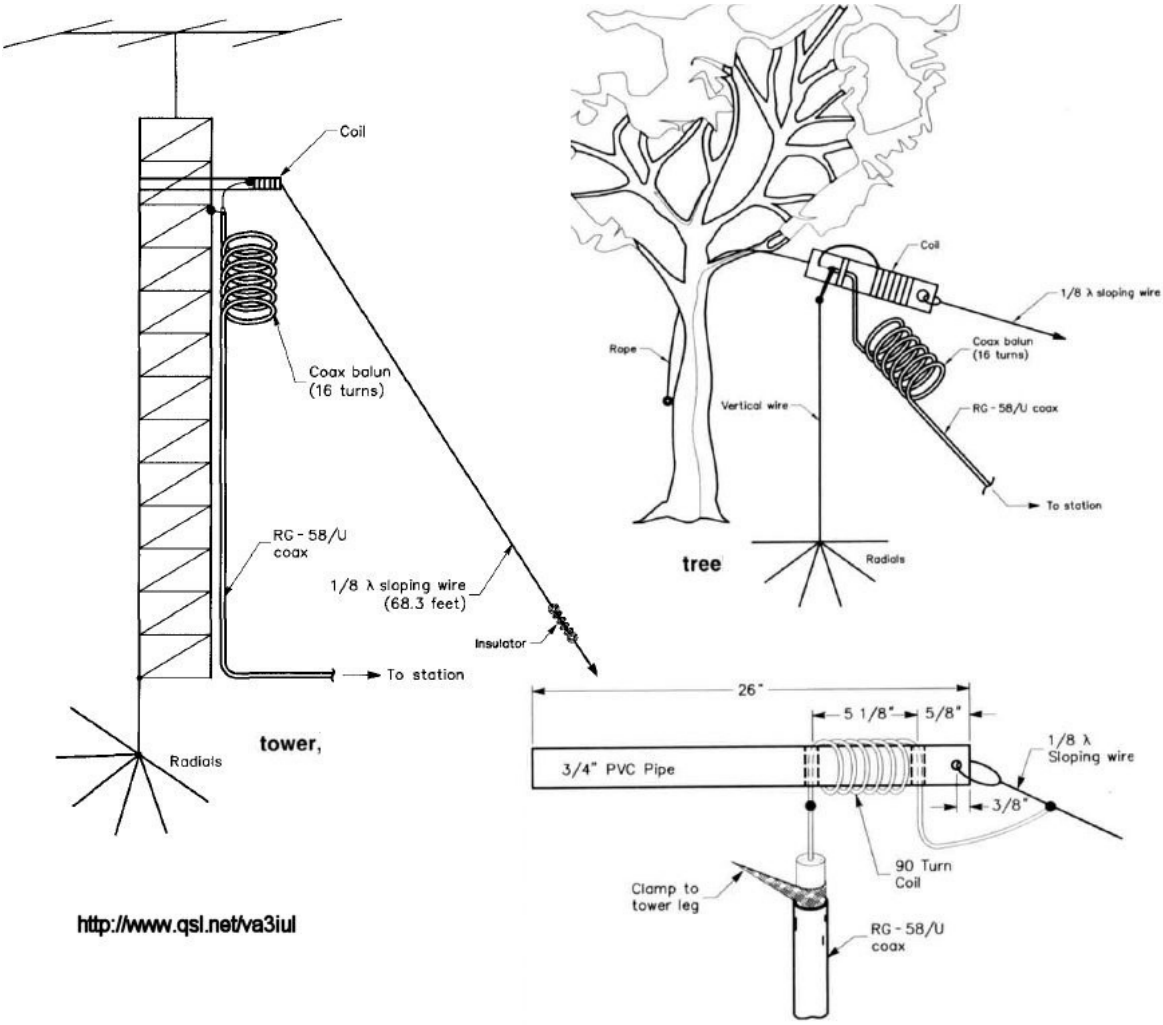

158 - Tree-Mounted HF Antenna

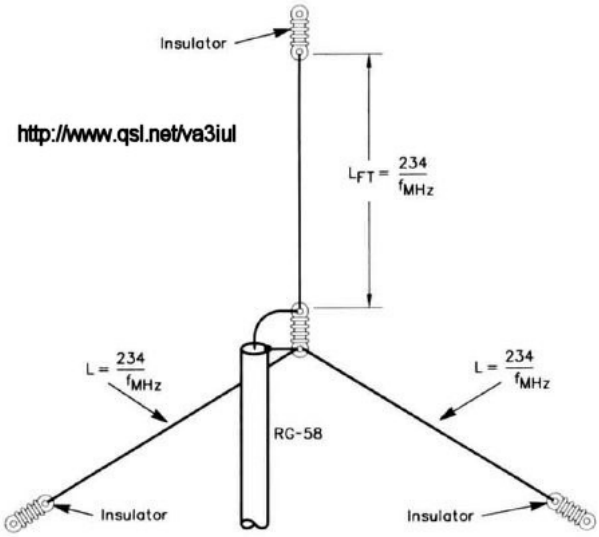

159 - Multiband Vertical Antenna for 80m, 40m, 20m

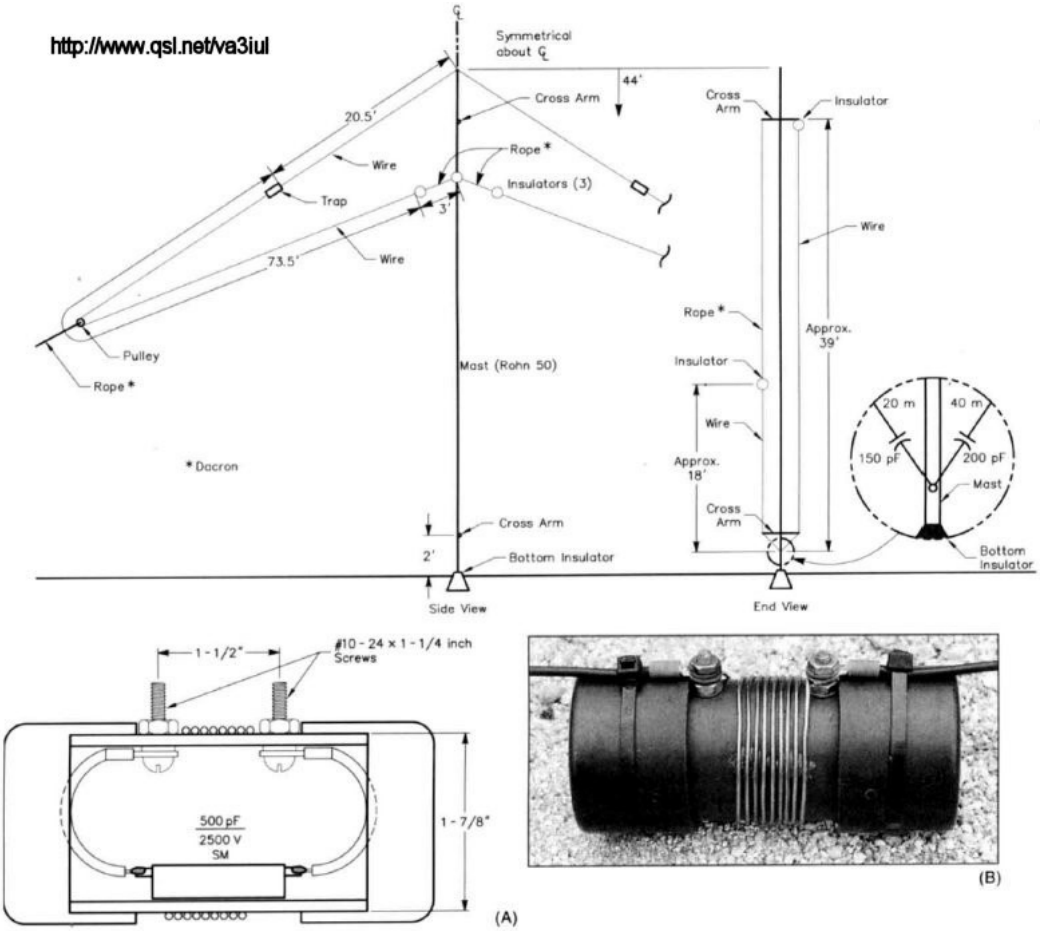

160 - Marconi Antenna for 136 kHz

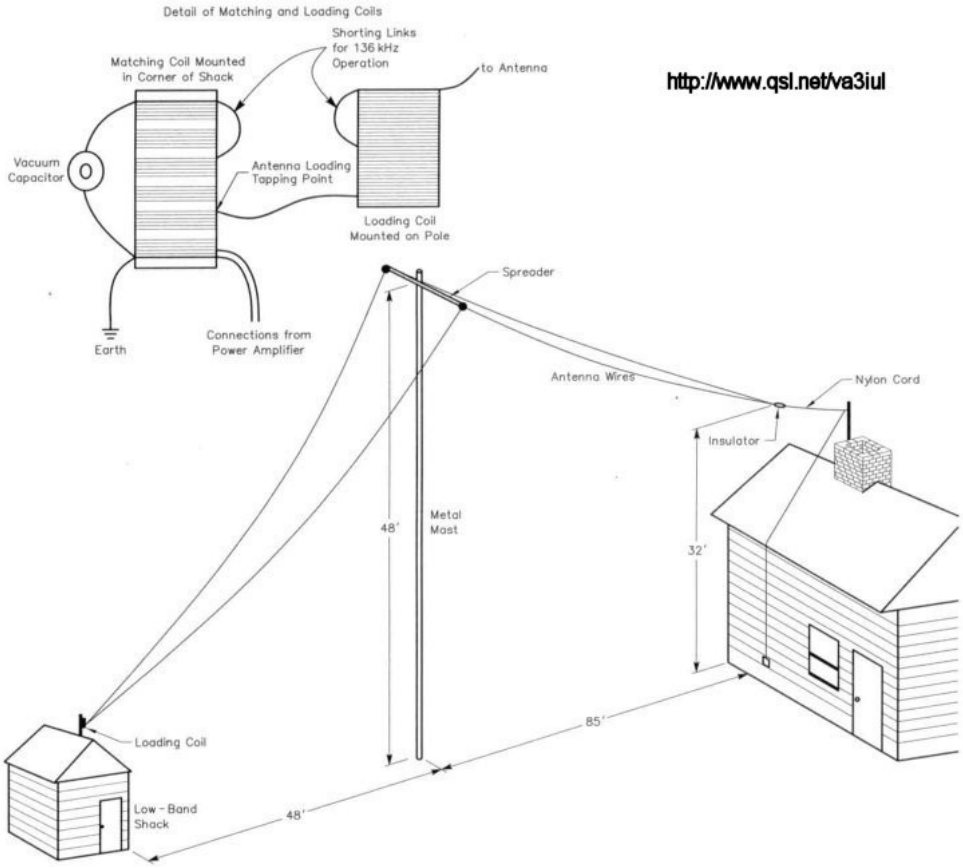

161 - Simple Killer Antenna for 40m

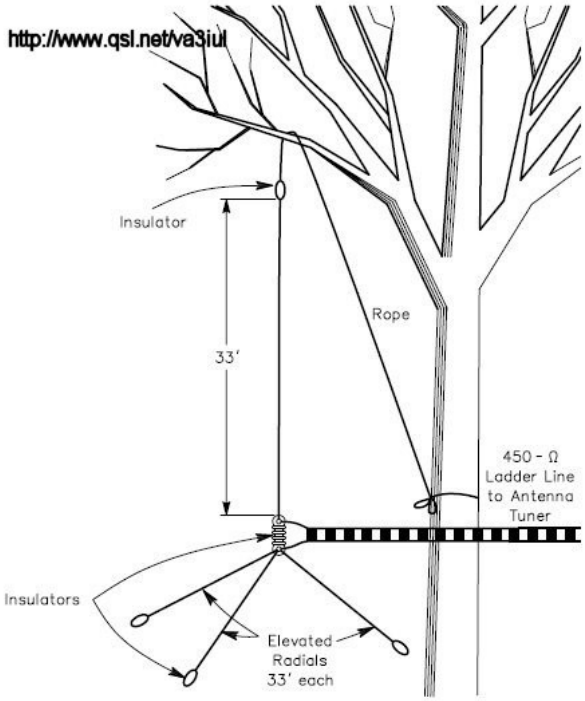

162 - Stub-Directed V Antenna for 80m

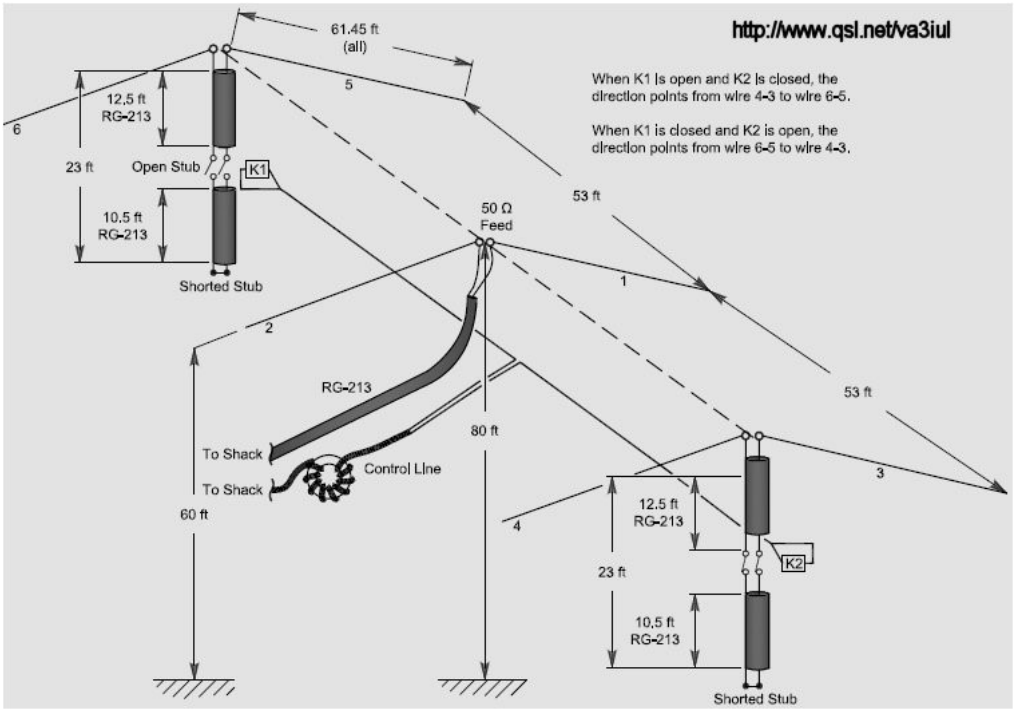

163 - KT0NY Over-and-Under DX Antenna for 20m

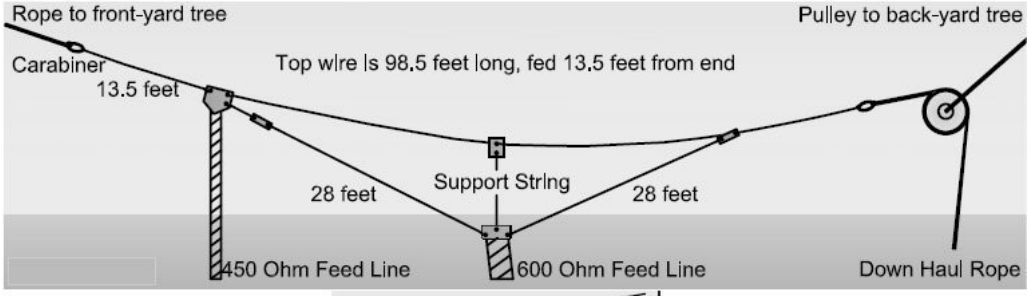

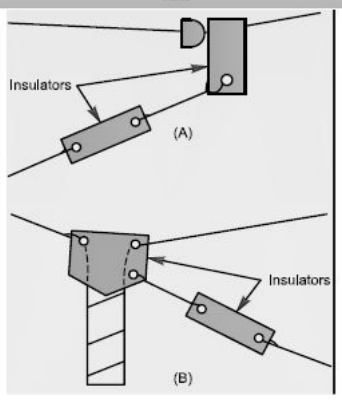

http://www.qsl.net/va3iul

---

164 - Horizontal Loop Antennas

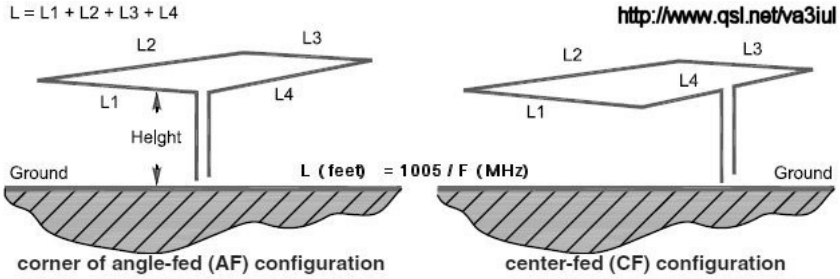

Loop Performance by Shape and Feed Point

	Circular Loop		*Square Loop AF*		*Triangle Loop AF*		*Square Loop CF*		*Triangle Loop CF*	
	Gain (dBi)	*Elev*	*Gain (dBi)*	*Elev*	*Gain (dBi)*	*Elev*	*Gain (dBi)*	*Elev*	*Gain (dBi)*	*Elev*
1.9 MHz	3.93	90°	3.46	90°	2.88	90°	3.70	90°	2.67	90°
3.9 MHz	8.47	90°	8.13	90°	7.76	90°	8.23	90°	8.04	90°
7.2 MHz	7.76	50°	7.35	50°	7.98	45°	7.64	45°	7.30	45°
10.1 MHz	8.34	35°	10.68	35°	7.35	30°	8.17	35°	7.24	30°
14.2 MHz	10.44	25°	12.50	25°	11.27	25°	10.25	25°	8.50	25°
18.1 MHz	11.18	20°	14.03	20°	12.32	20°	11.40	20°	8.84	20°
21.2 MHz	10.16	15°	14.55	15°	12.42	15°	11.28	15°	8.29	15°
24.9 MHz	10.77	15°	13.69	15°	14.09	15°	10.58	15°	10.10	15°
28.5 MHz	11.39	15°	12.85	10°	13.84	10°	11.19	10°	12.66	10°

---

165 - Ribbon J-Pole for 2m

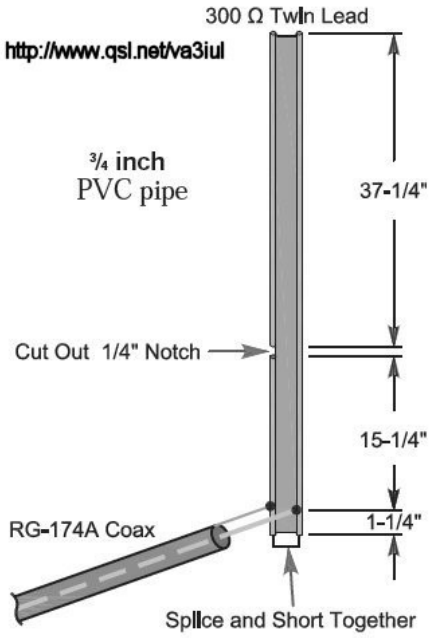

166 - Dual Band Ribbon J-Pole for 2m, 70cm

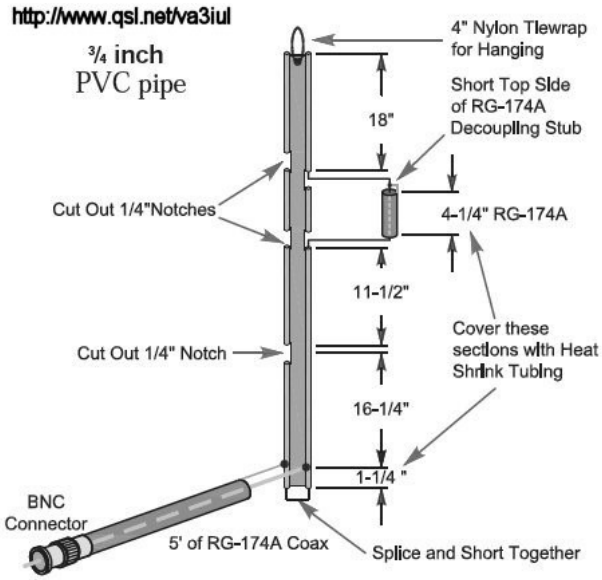

167 - Square Vertical Loop Antenna for 40m

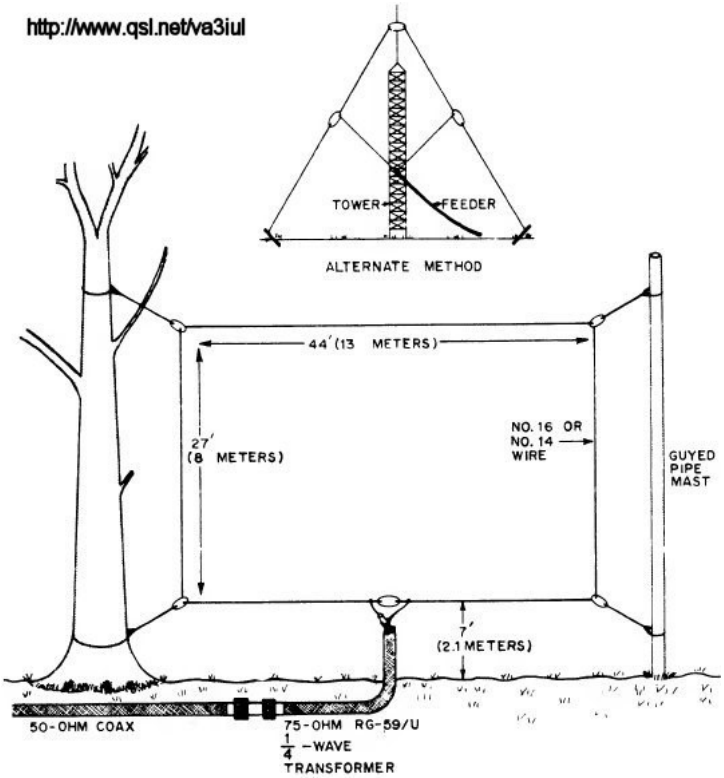

168 - Tri-Band Quad Antenna for 20m, 15m, 10m

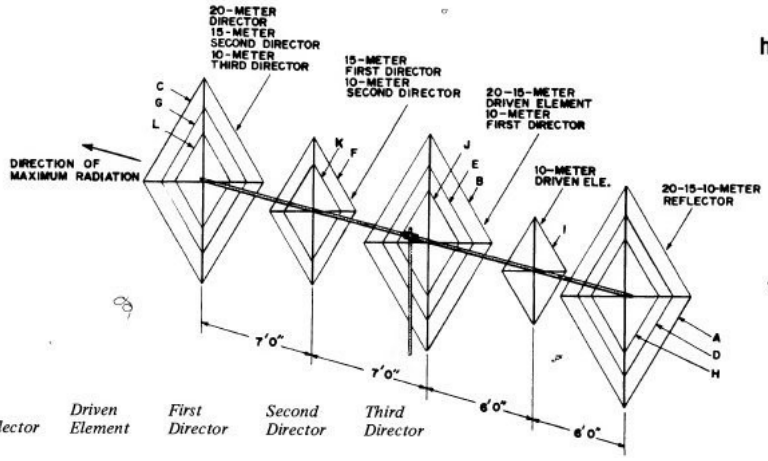

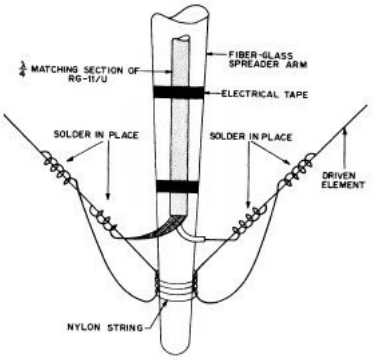

Band	*Reflector*	*Driven Element*	*First Director*	*Second Director*	*Third Director*
20 Meters	(A)72' 8"	(B) 71' 3"	(C) 69' 6"	–	–
15 Meters	(D) 48' 6½"	(E) 47' 7½"	(F) 46' 5"	(G) 46' 5"	–
10 Meters	(H) 36' 2½"	(I) 35' 6"	(J) 34' 7"	(K) 34' 7"	(L) 34' 7"

169 - 3D Quad Antenna for 80m, 40m, 20m, 15m, 10m

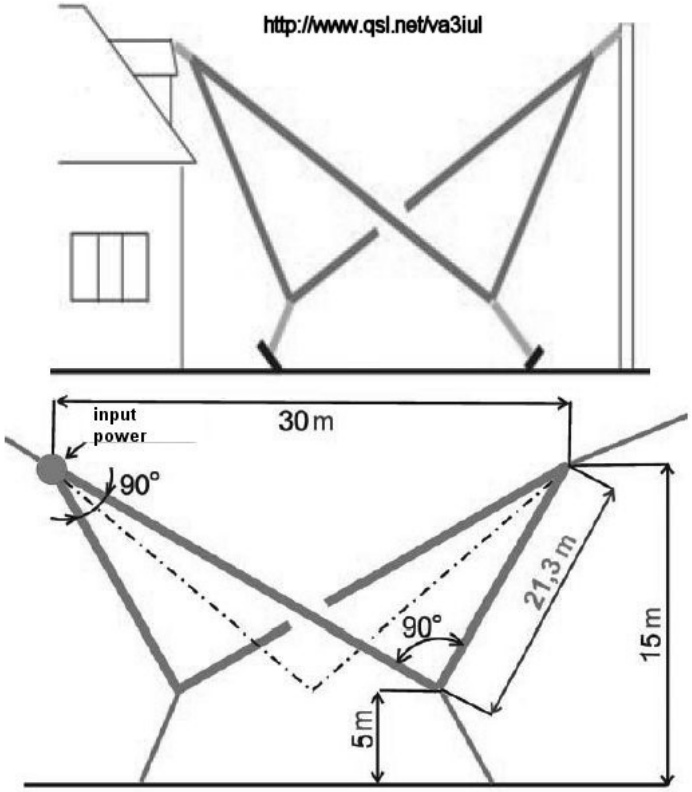

170 - Sloping Wire Antenna for 30m, 20m, 17m, 15m, 12m, 10m

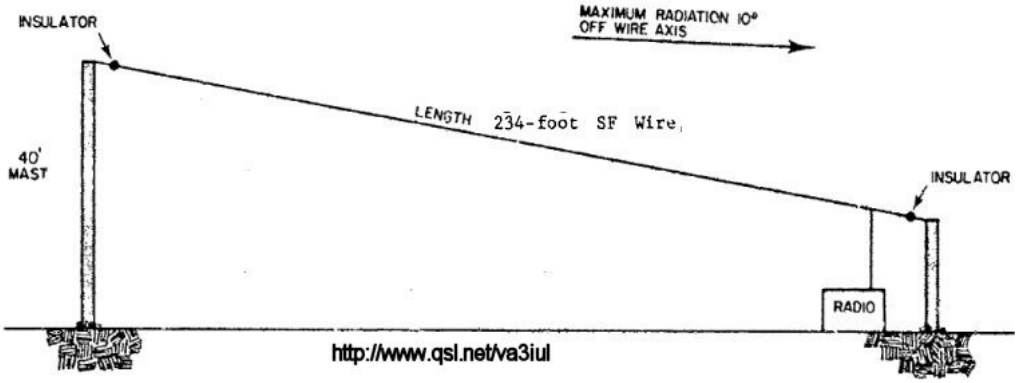

171 - Broadband Dipole Antenna with Coaxial Resonator for 80m

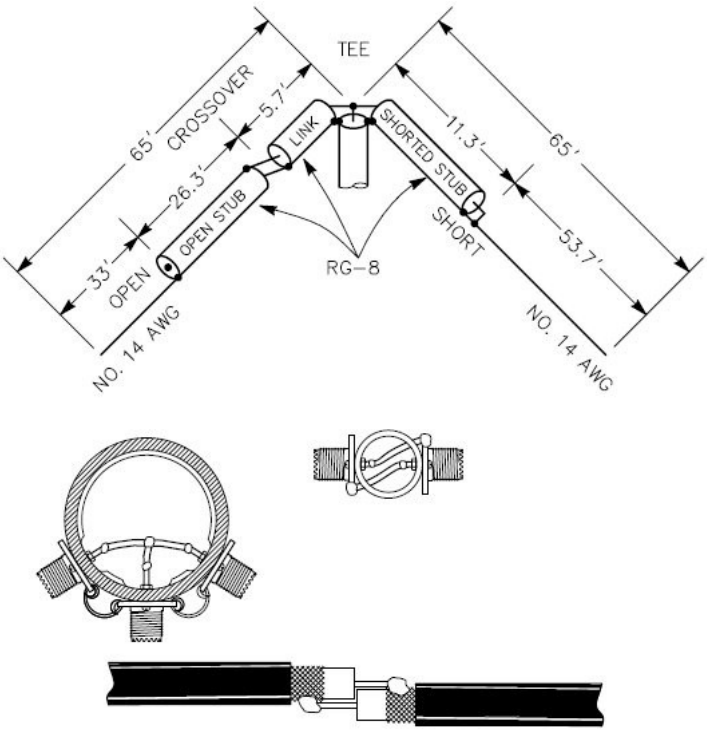

---

172 - Resonant Feedline Dipole Antenna for 80m

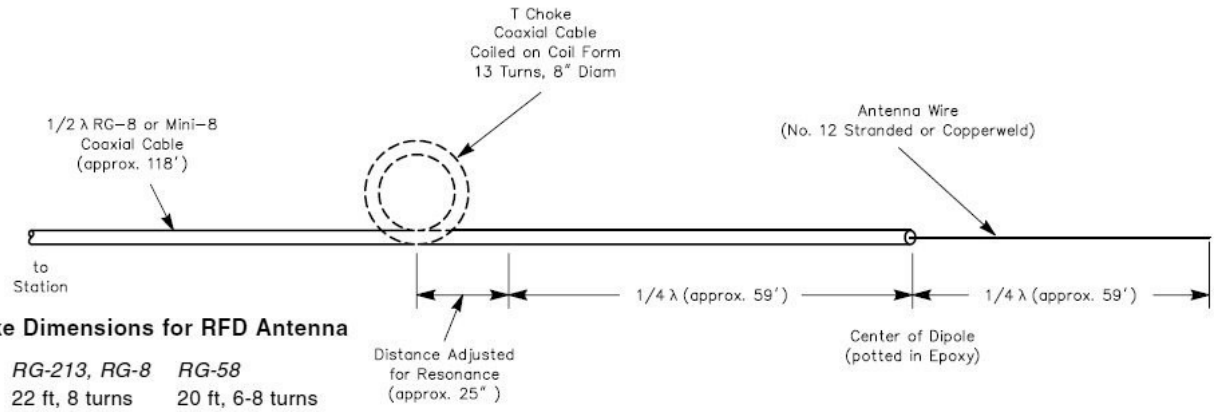

Choke Dimensions for RFD Antenna

Freq	*RG-213, RG-8*	*RG-58*
3.5	22 ft, 8 turns	20 ft, 6-8 turns
7	22 ft, 10 turns	15 ft, 6 turns
10	12 ft, 10 turns	10 ft, 7 turns
14	10 ft, 4 turns	8 ft, 8 turns
21	8 ft, 6-8 turns	6 ft, 8 turns
28	6 ft, 6-8 turns	4 ft, 6-8 turns

http://www.qsl.net/va3iul

---

173 - Dual-Band Loading Wire Antenna for 80m, 30m

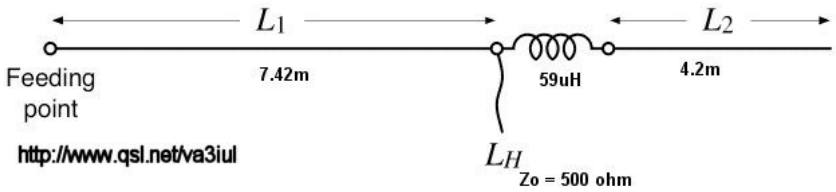

http://www.qsl.net/va3iul

---

174 - Stub Matching Antennas

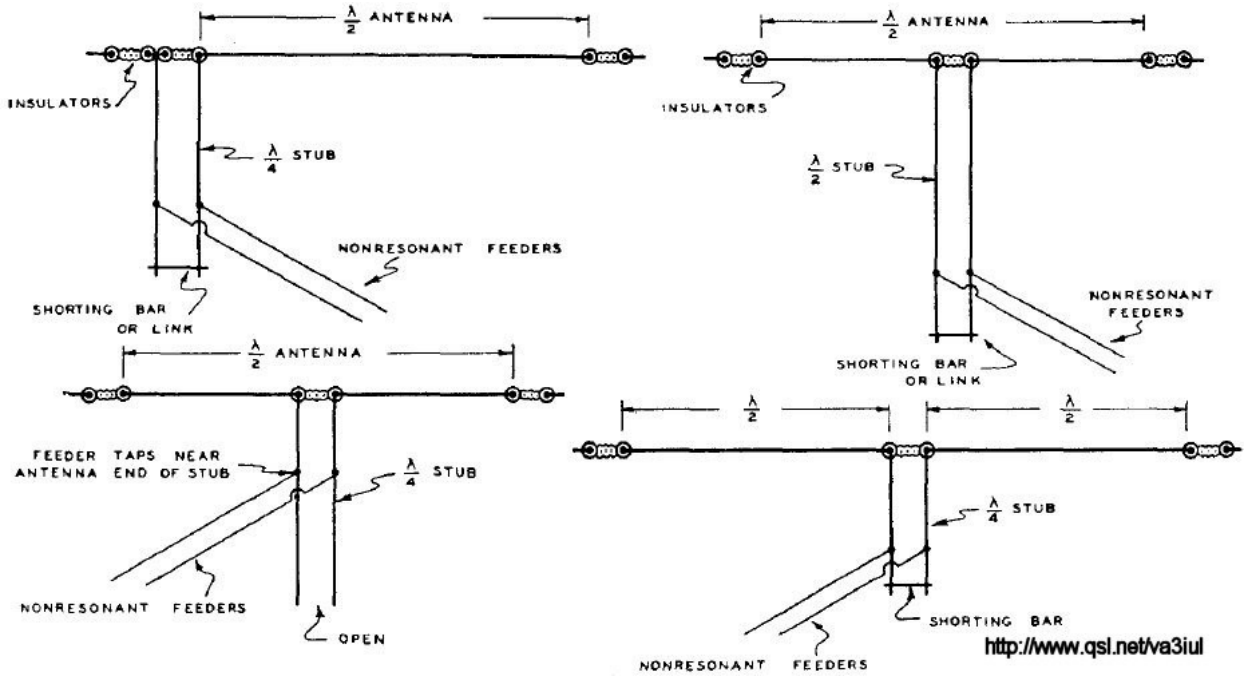

175 - J-Style Vertical Wire Antenna for 10m

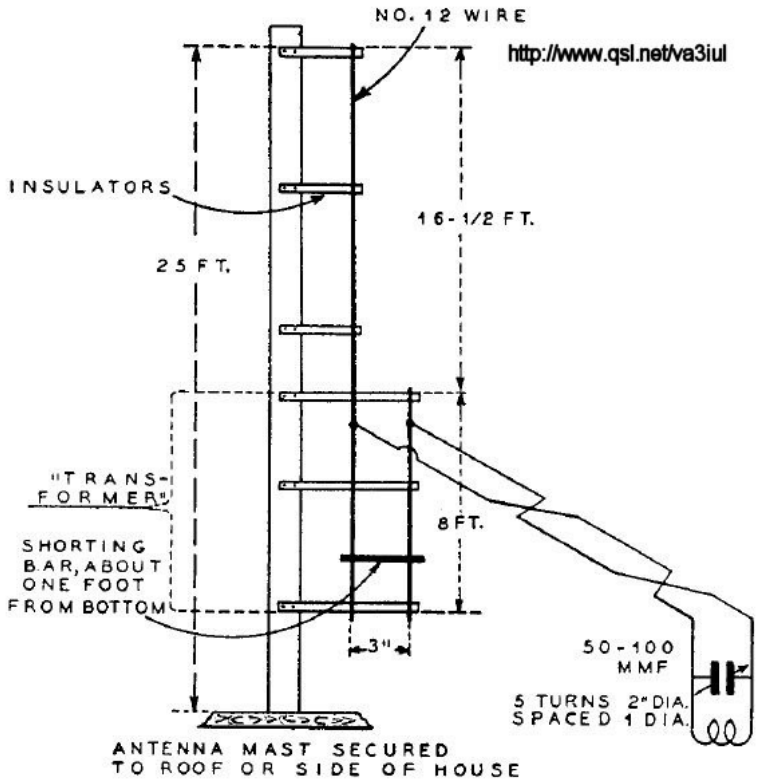

176 - Dual Band Vertical with Zepp Feeders for 40m, 20m

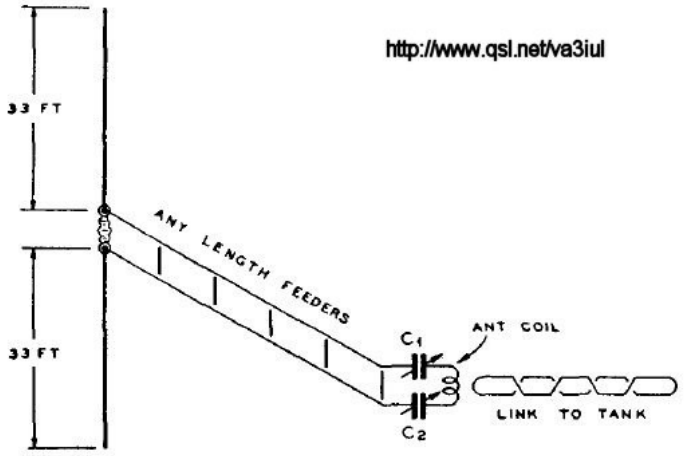

177 - RCA Double Doublet for 40m to 12m

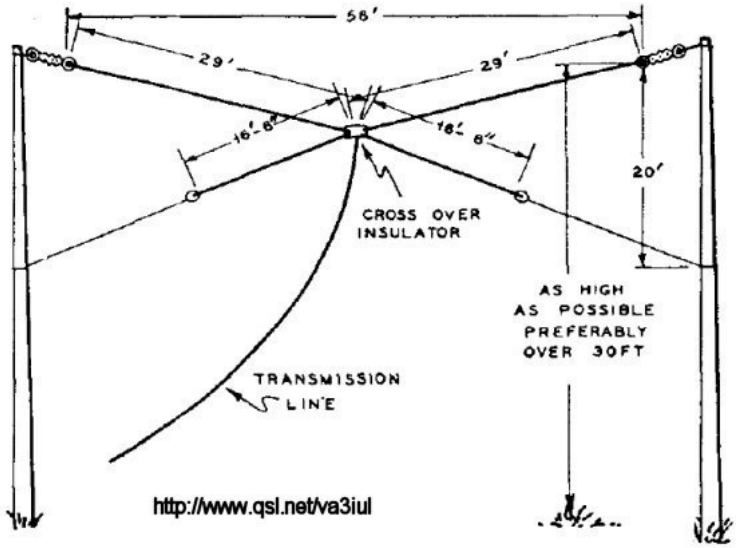

178 - RCA Spiderweb Antenna for 40m to 6m

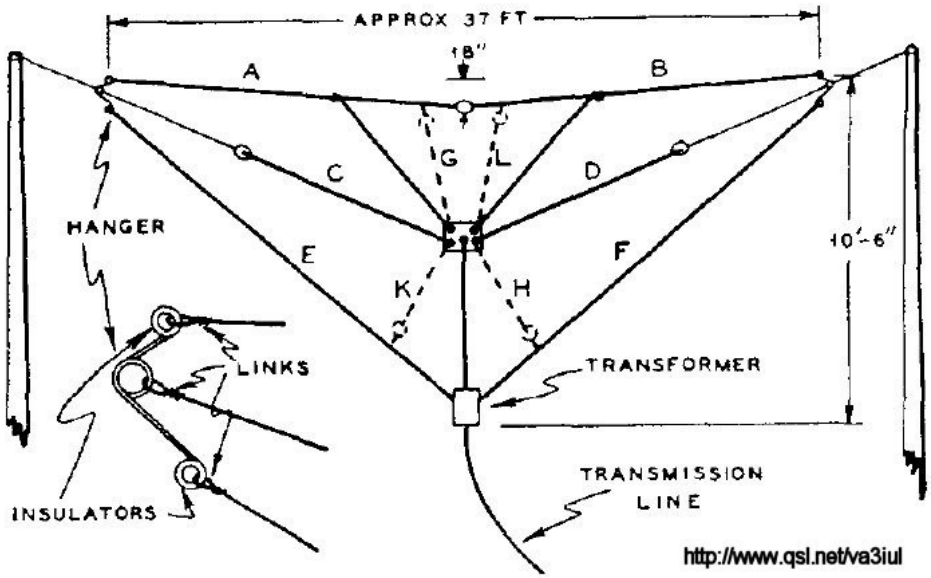

179 - Folded Dipole with Shorted Straps

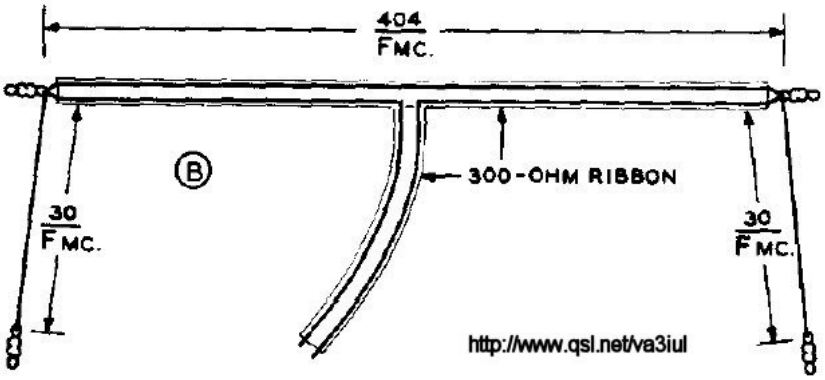

180 - Twin-Lead Marconi Antenna for 160m, 80m

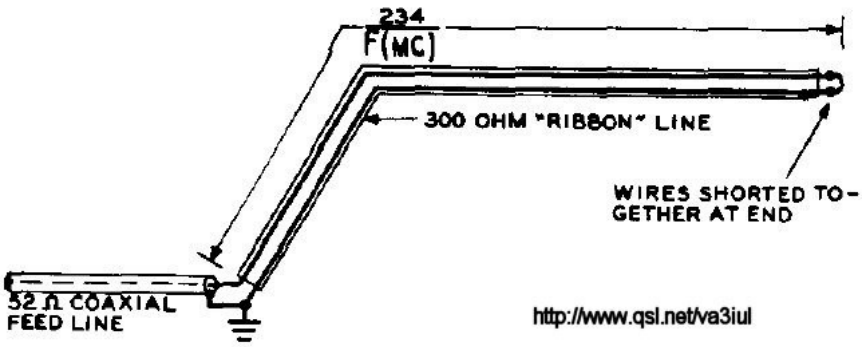

181 - Broadband Antenna Quarter-Wave Balun for 80m

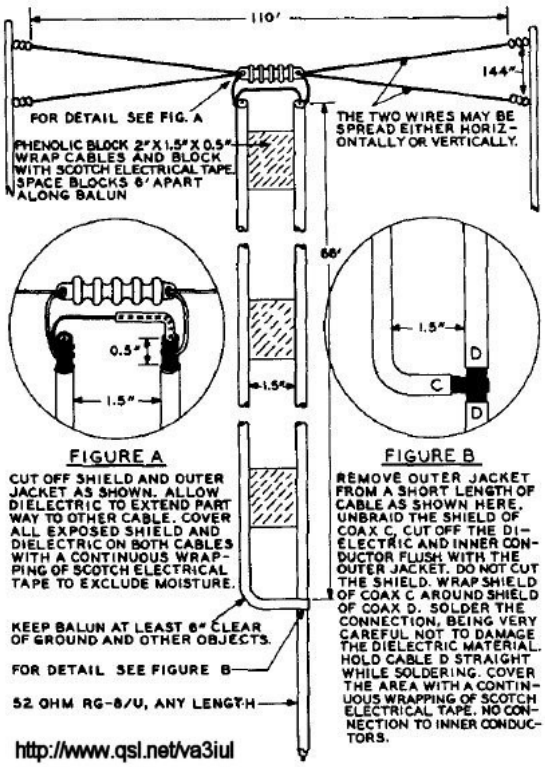

DIMENSIONS SHOWN HERE ARE FOR THE 80 METER BAND. THIS ANT-ENNA MAY BE BUILT FOR OTHER BANDS BY USING DIMENSIONS THAT ARE MULTIPLES OR SUBMULTIPLES OF THE DIMENSIONS SHOWN. BALUN SPACING IS 1.5" ON ALL BANDS.

182 - Three-Quarter-Wave Folded Doublet for Dual-Band

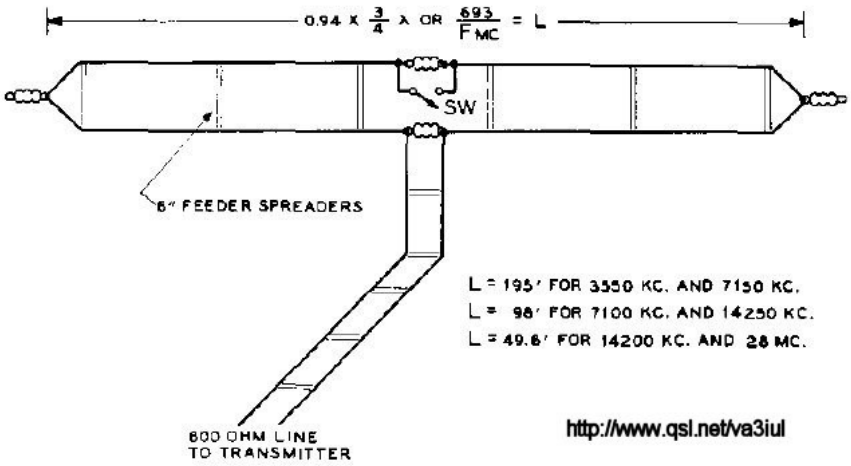

183 - Three-Quarter-Wave Folded Doublet No-Switch for Dual-Band

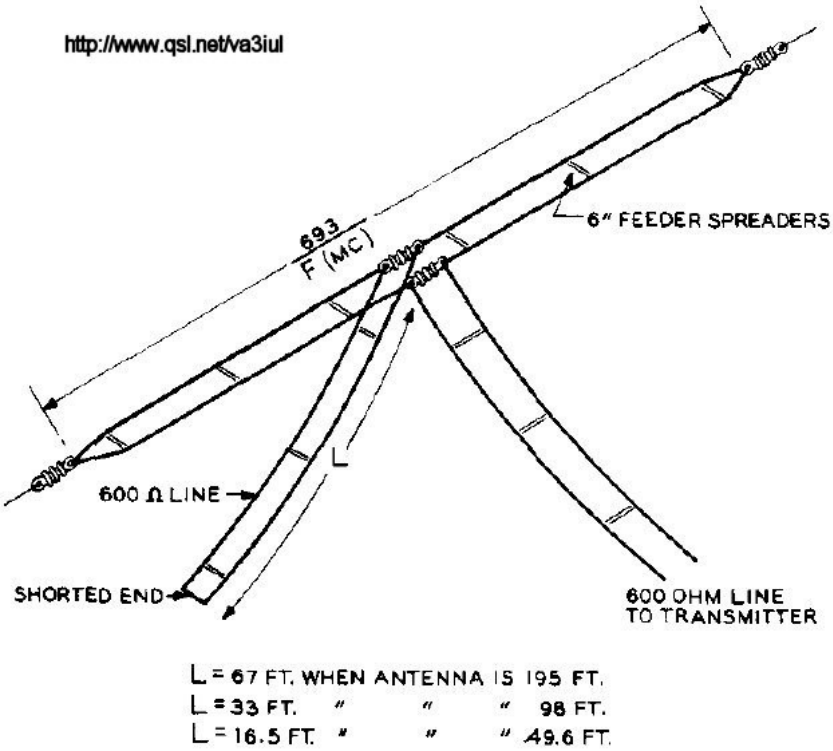

184 - Wideband Omni-Directional Discone Antenna

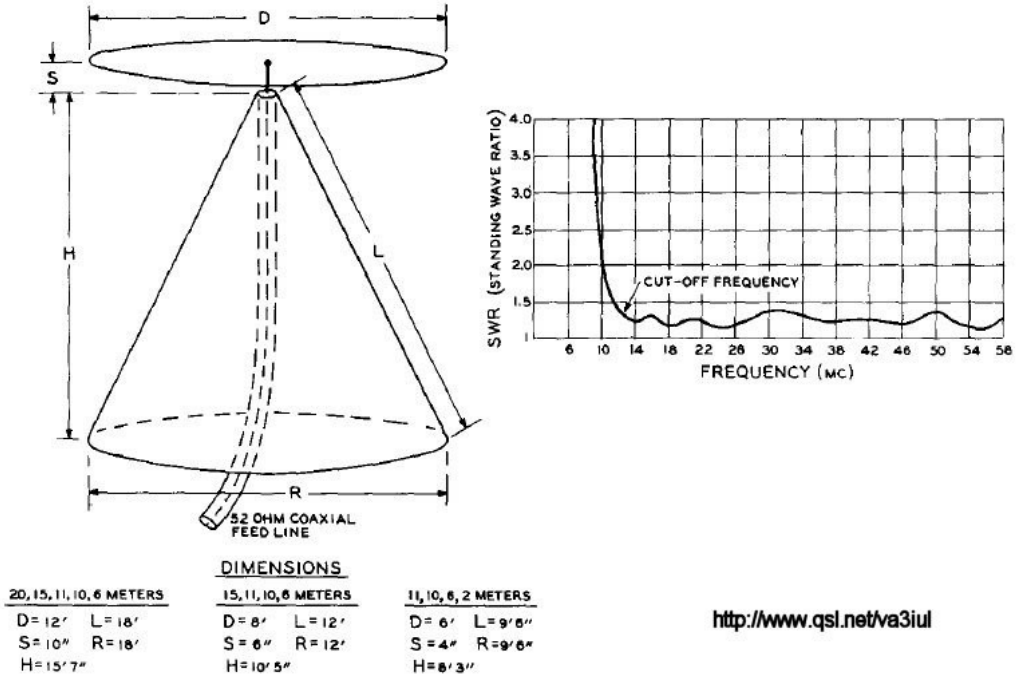

185 - Wideband Rhombic Antenna for 40m to 10m

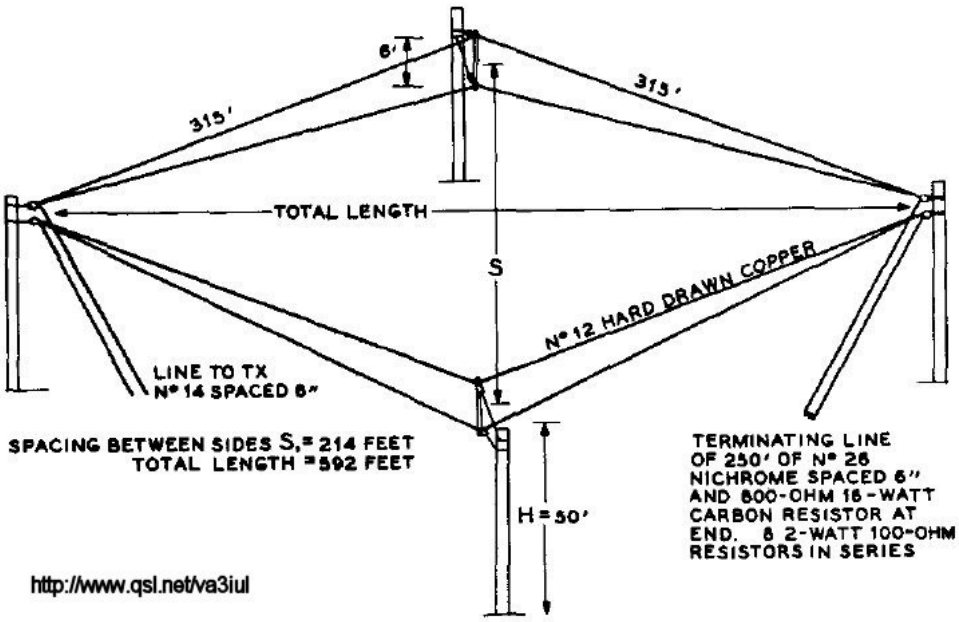

186 - Pre-Cut Linear Array Antenna 3dB-Gain for 40m

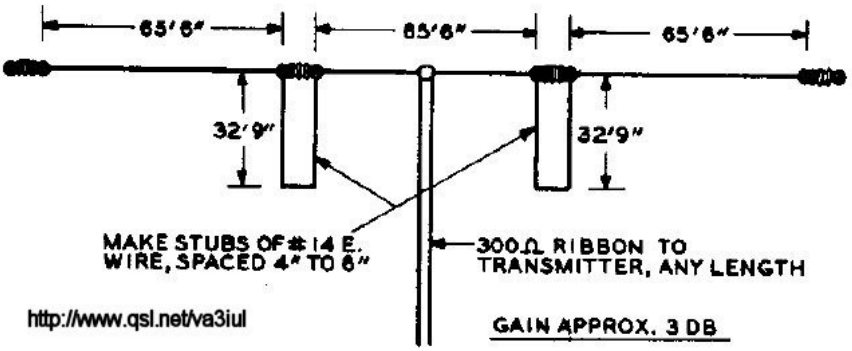

187 - X-Array Antenna 6dB-Gain for 20m, 15m, 10m

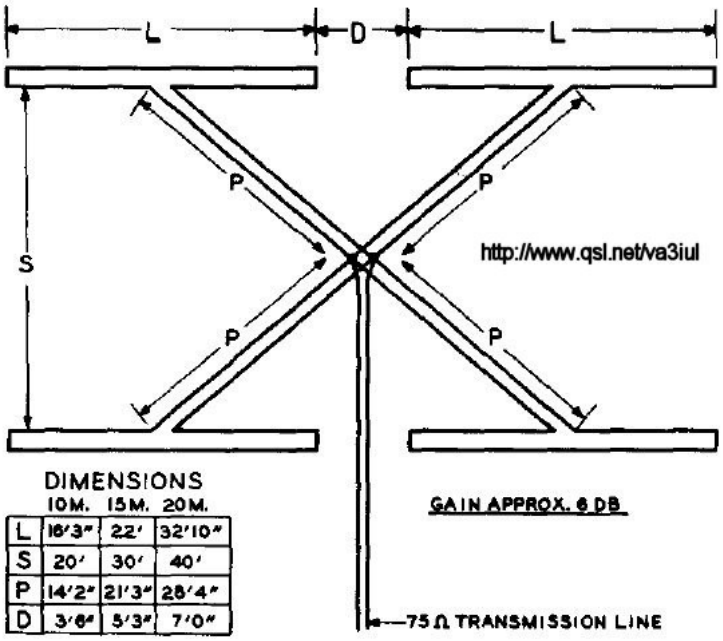

DIMENSIONS

	10M.	15M.	20M.
L	16'3"	22'	32'10"
S	20'	30'	40'
P	14'2"	21'3"	28'4"
D	3'6"	5'3"	7'0"

The entire array (with the exception of the 75-ohm feed line) is constructed of 300-ohm ribbon line. Be sure phasing lines (P) are poled correctly, as shown.

---

188 - Double-Bruce Array Antenna 5dB-Gain for 20m, 10m

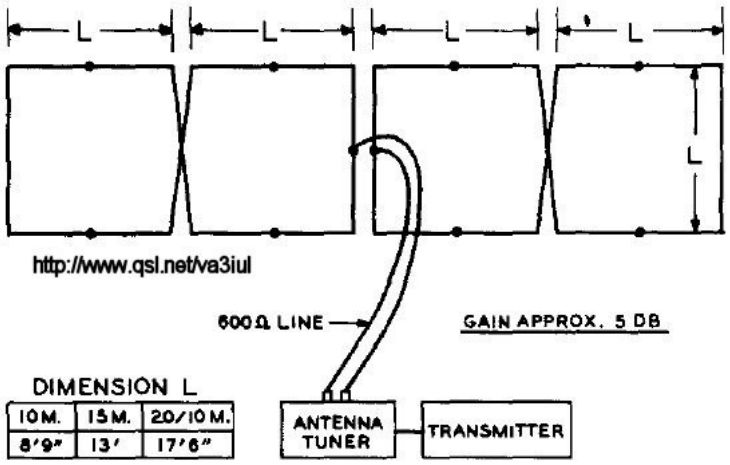

DIMENSION L

10M.	15M.	20/10M.
8'9"	13'	17'6"

---

189 - Bi-Square Broadside Array 4dB-Gain for 20m, 15m, 10m

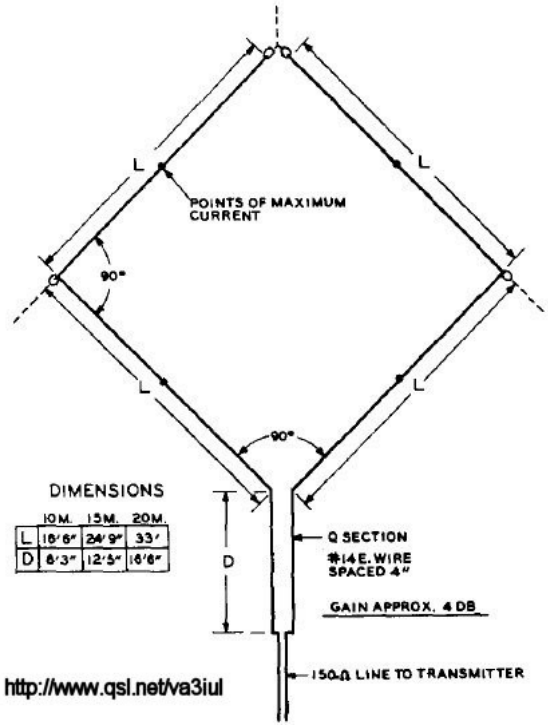

---

190 - Six-Shooter Broadside Array 7.5dB-Gain for 20m, 15m, 10m

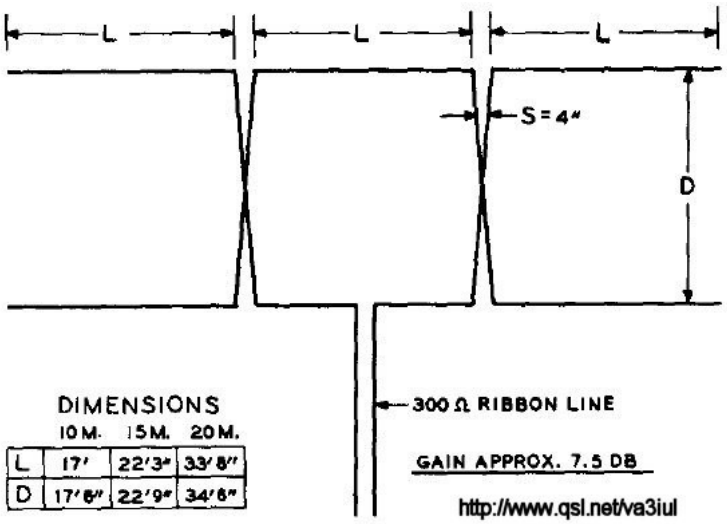

---

191 - Triplex Flat-Top Beam 4.5dB-Gain for 20m, 15m, 10m

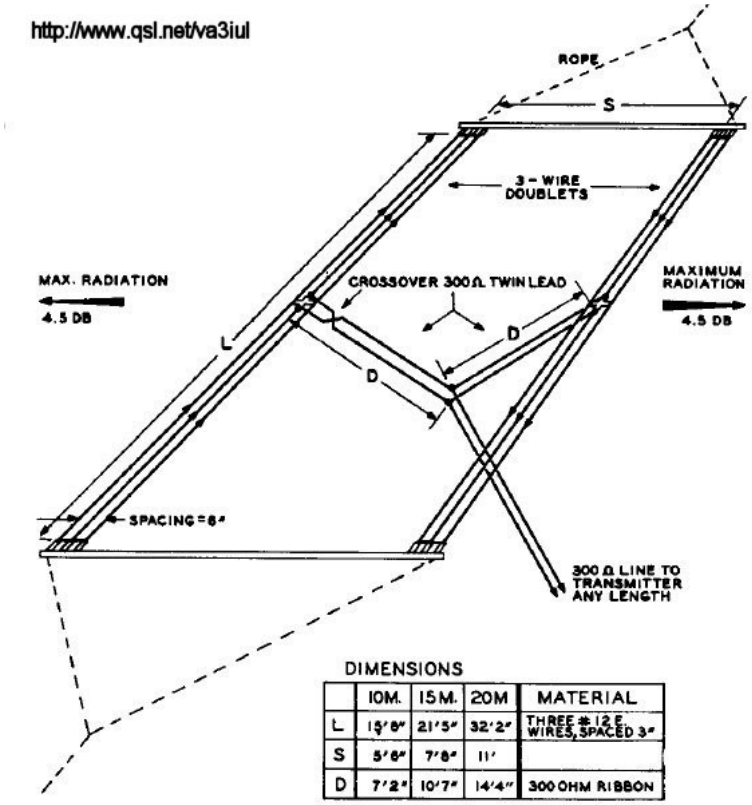

DIMENSIONS

	10M.	15M.	20M	MATERIAL
L	15'8"	21'5"	32'2"	THREE # 12 E. WIRES, SPACED 3"
S	5'6"	7'8"	11'	
D	7'2"	10'7"	14'4"	300 OHM RIBBON

192 - Dual-Band Tilt Antenna for 20m, 10m

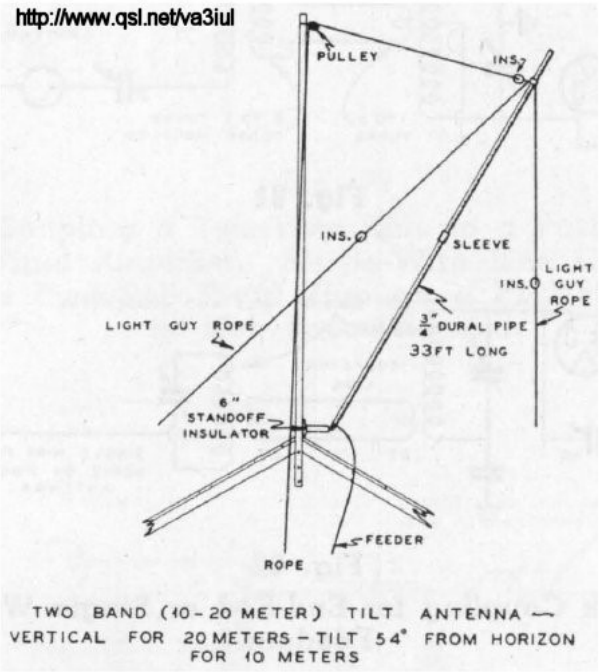

193 - Super Space Multiband Dipole Antenna for 80m to 10m

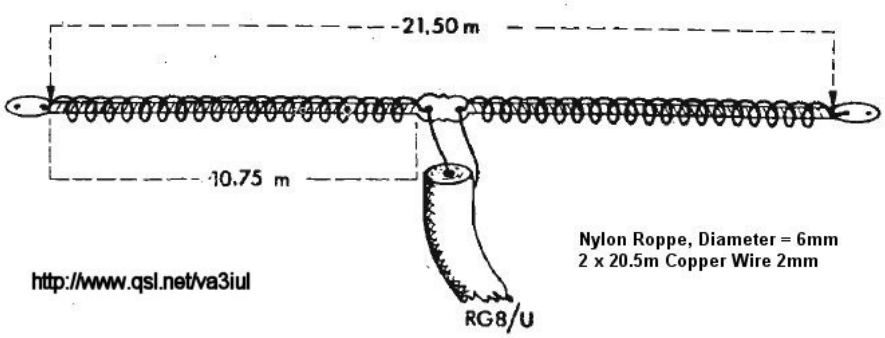

194 - Bi-Square Beam Antenna Gain=5.5dB for 10m

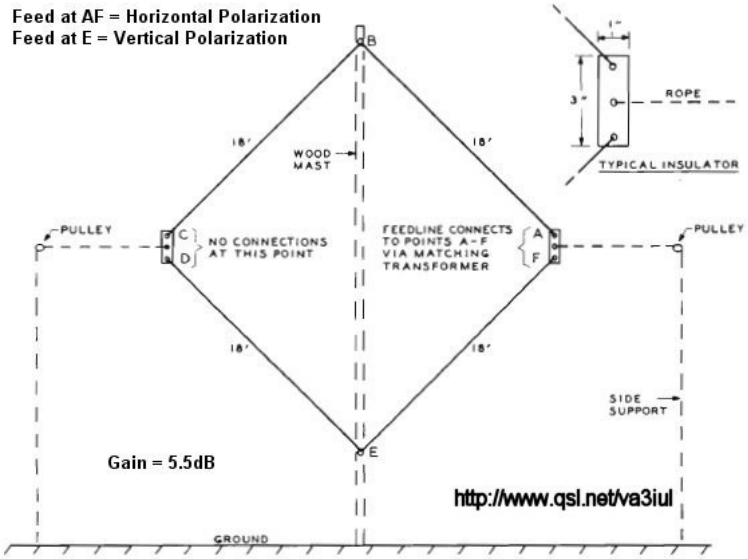

---

195 - Cousin of G5RV Multiband Antenna for 40m to 10m

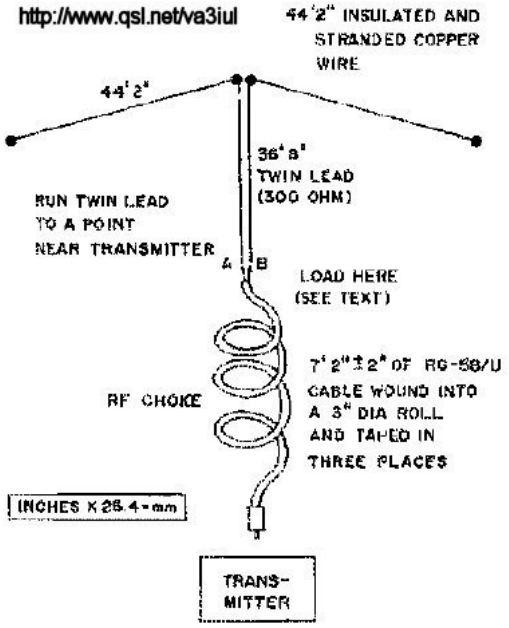

---

196 - Cayman Quad Antenna for 20m

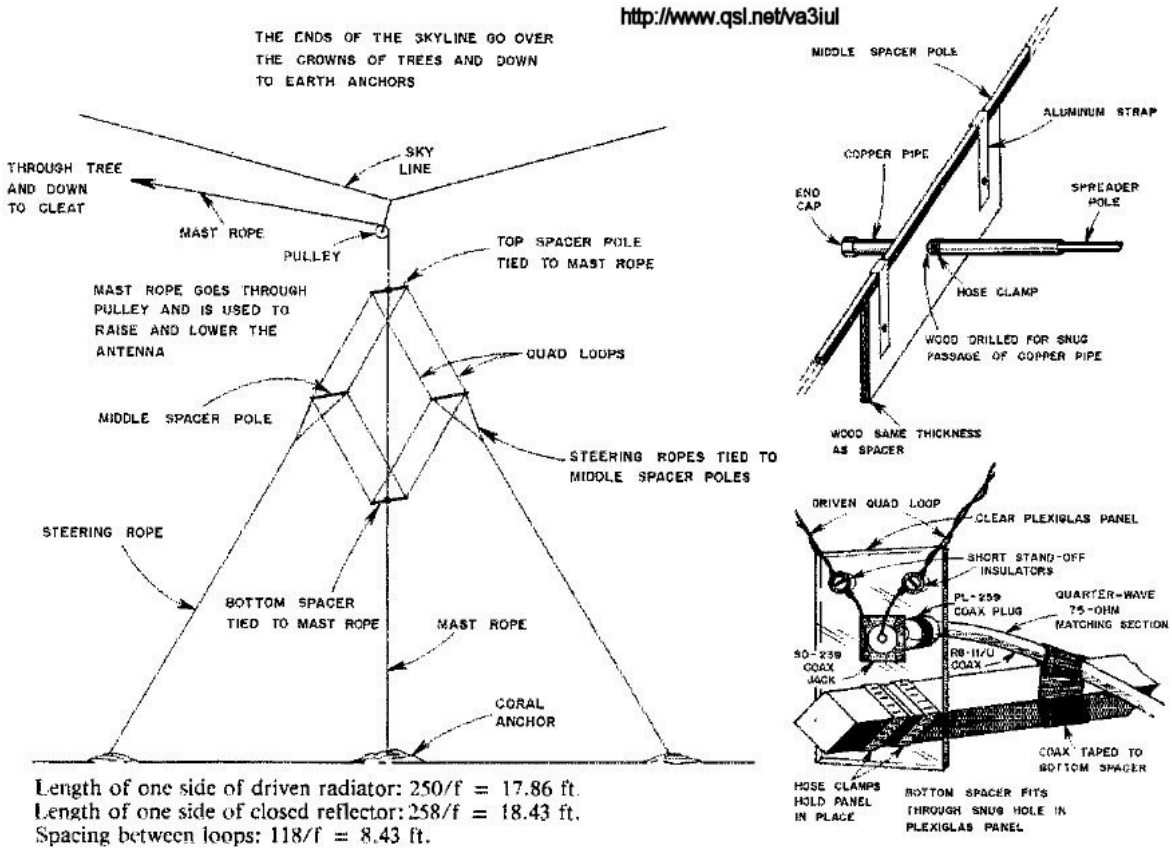

Length of one side of driven radiator: 250/f = 17.86 ft.
Length of one side of closed reflector: 258/f = 18.43 ft.
Spacing between loops: 118/f = 8.43 ft.

---

197 - Hentenna Gain=3dB with Bazooka Match for 6m

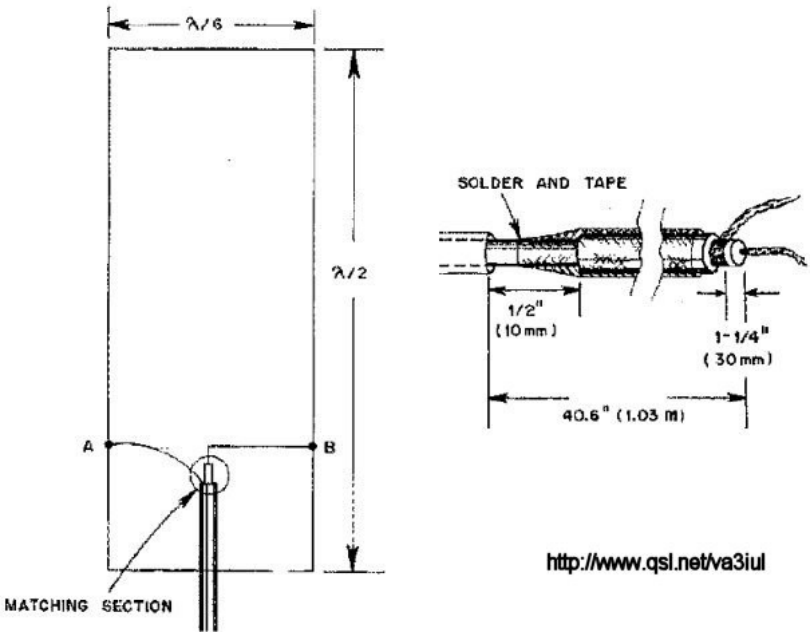

---

198 - X-Beam Antenna Gain=3dB for 20m

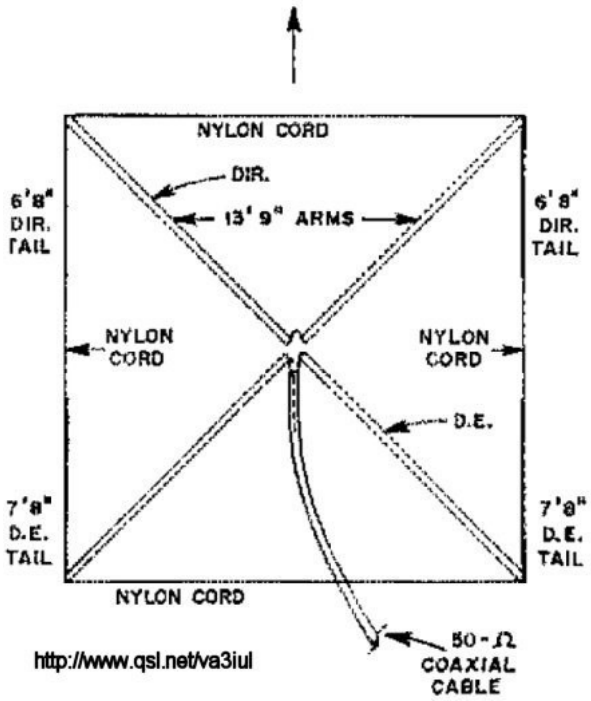

---

199 - Twin Delta Loop Antenna Gain=6dB for 160m, 80m, 40m

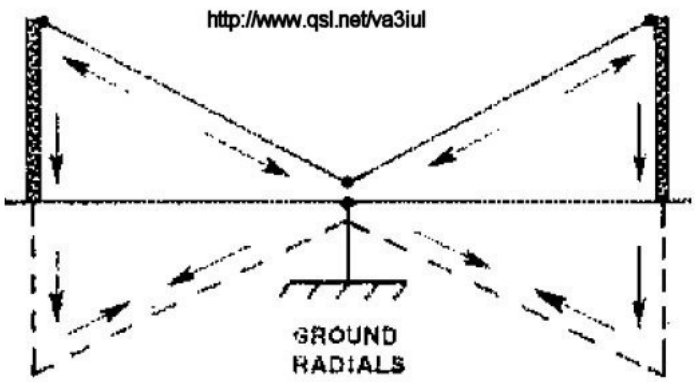

Twin- Delta Loop, with the Image in the ground plane.

Band	*Tower Height (ft)*	*Length of Sloping Wires (ft)*
160 m†	102.03	204.06
80 m	49.86	99.72
40 m	25.92	51.84

---

200 - Inverted-V Beam Antenna for 30m

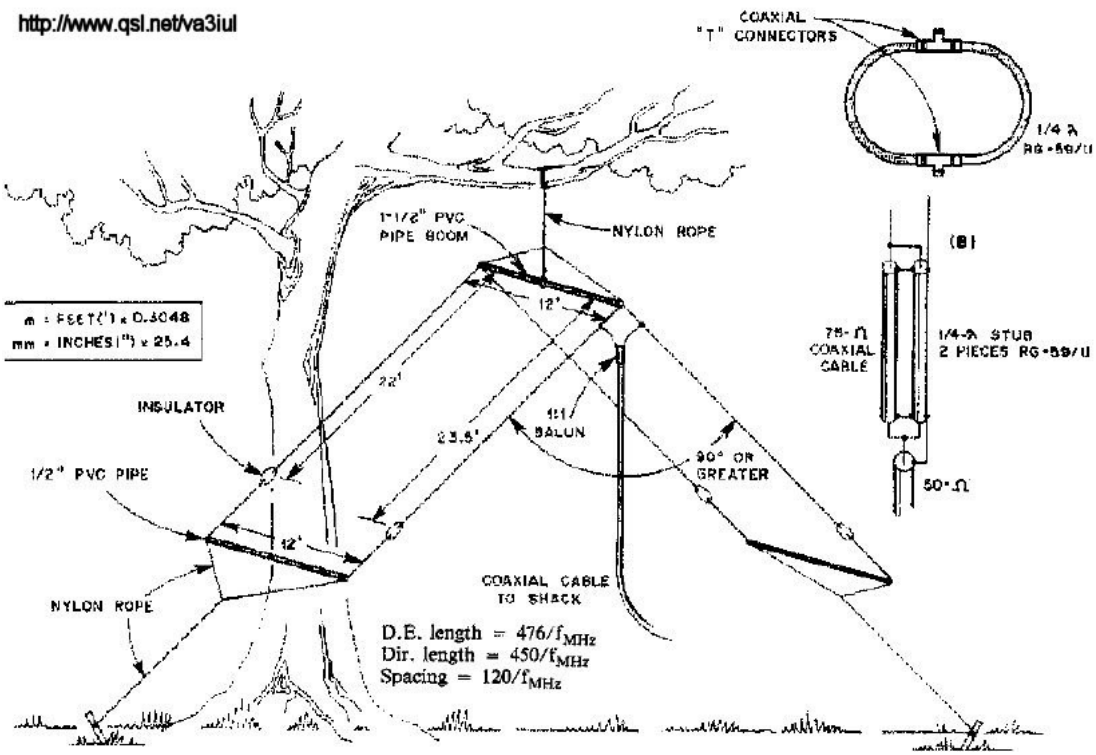

201 - FD4 Windom Antenna for 80m, 40m, 20m, 10m

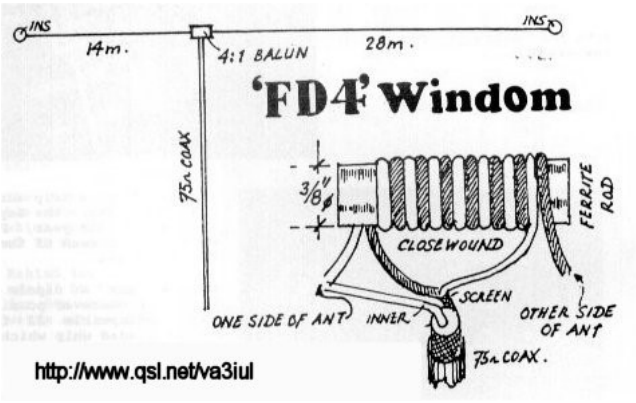

202 - Two Elements Phased Delta Loop for 40m

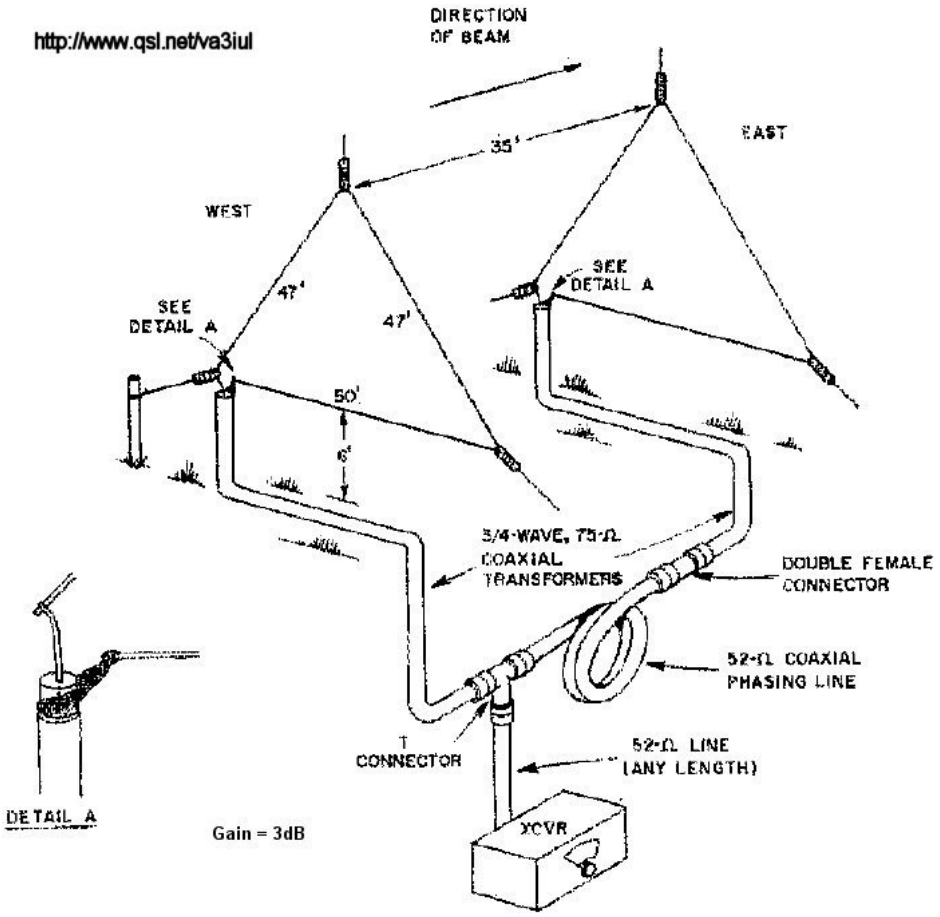

203 - Three Elements Wire Yagi for 10m

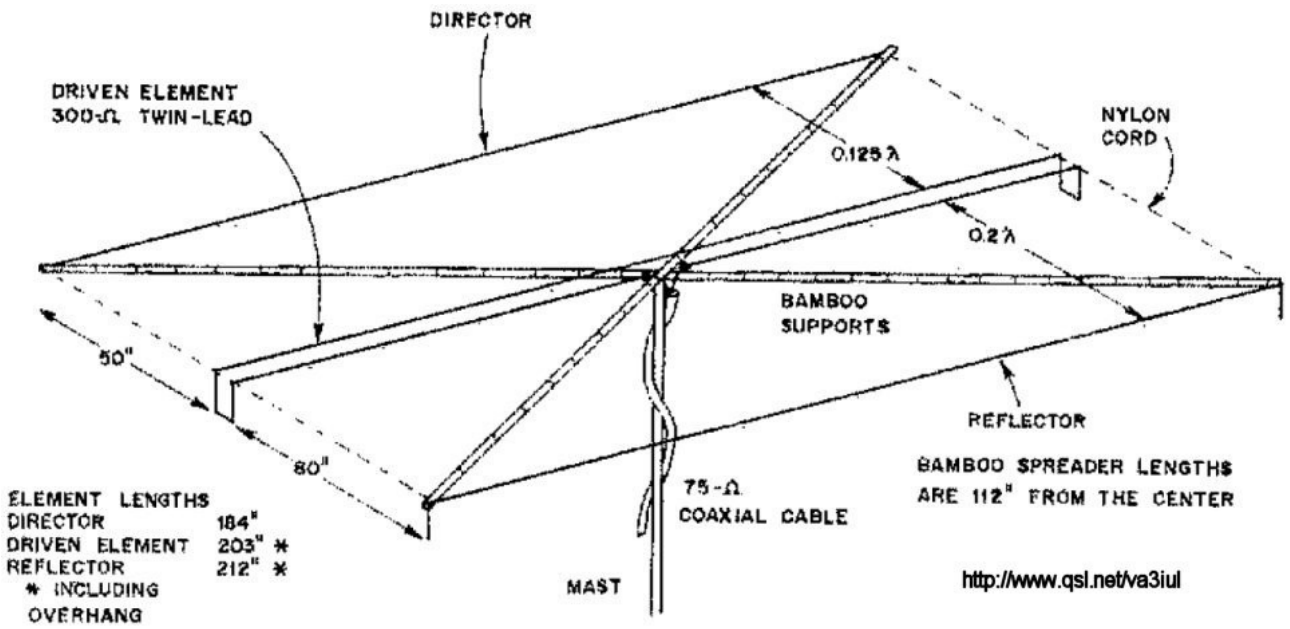

204 - Low Radiation Angle Full-Wave Loop Antenna for 80m

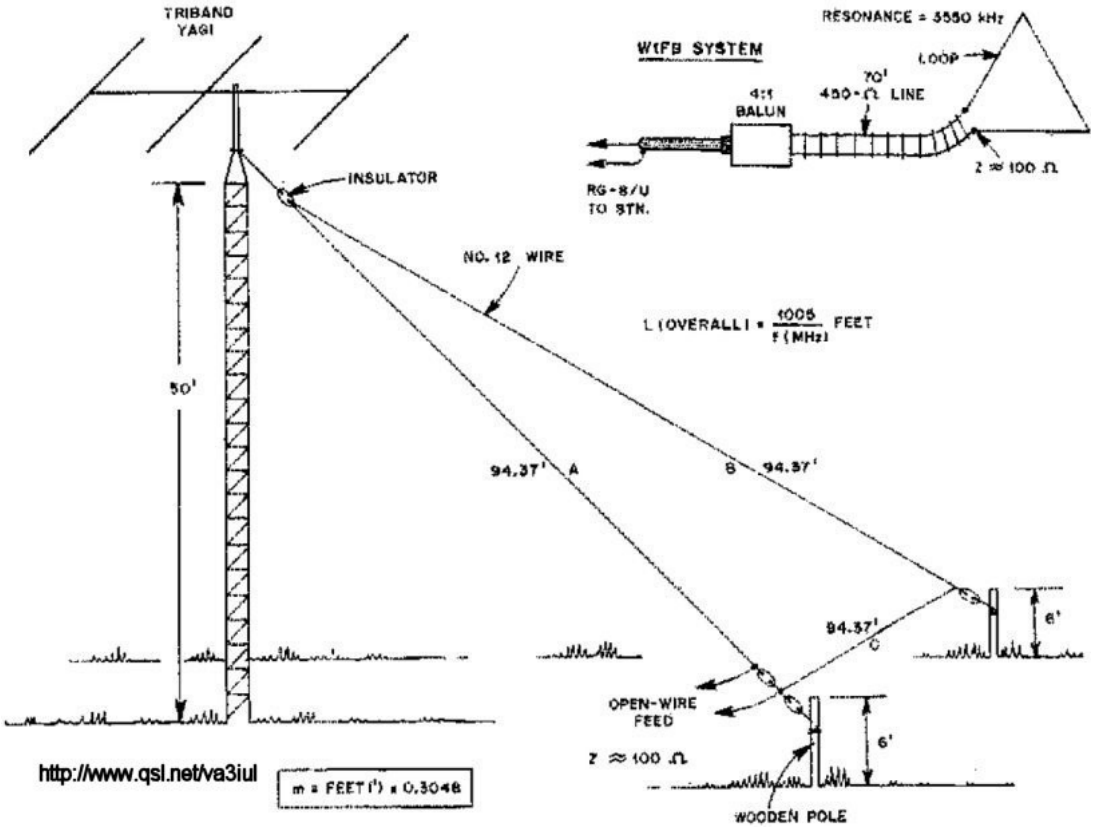

205 - Collinear Antenna Gain=3dB for 2m

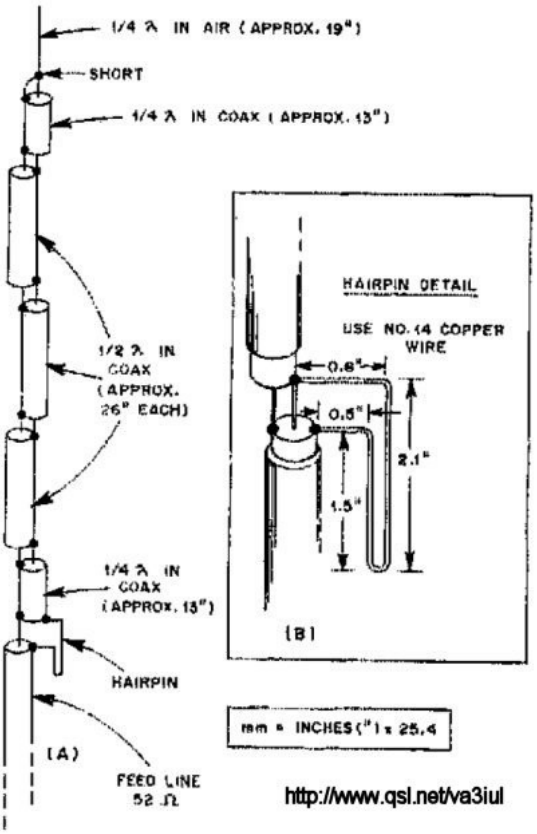

206 - X-Ray Monoband Antenna Gain=6.5dBd

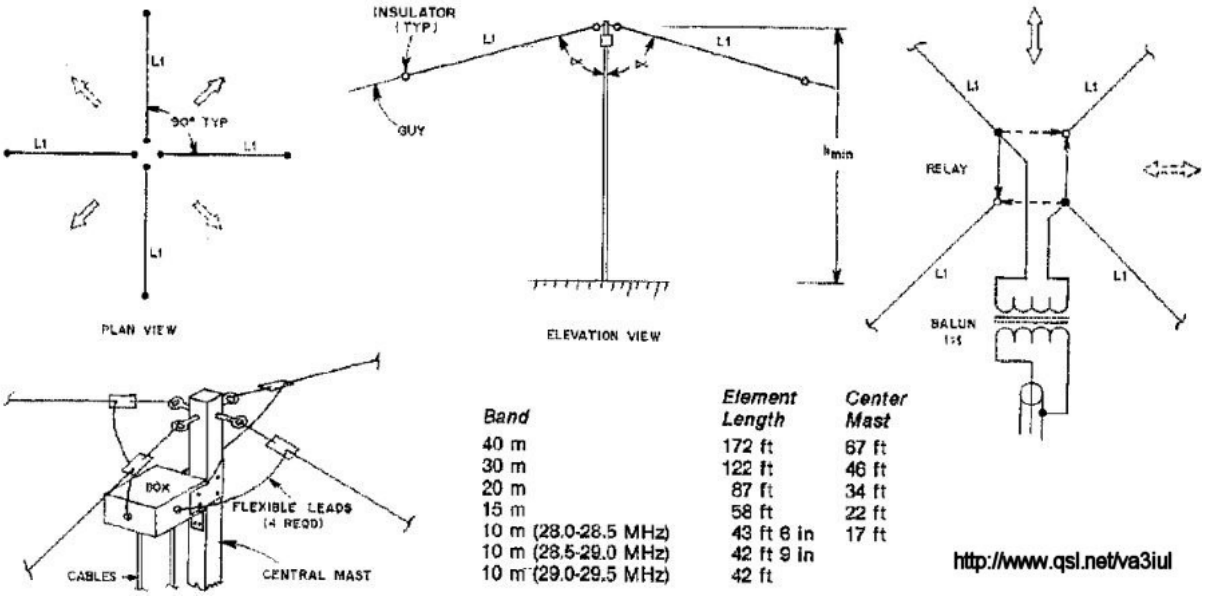

Band	Element Length	Center Mast
40 m	172 ft	67 ft
30 m	122 ft	46 ft
20 m	87 ft	34 ft
15 m	58 ft	22 ft
10 m (28.0-28.5 MHz)	43 ft 6 in	17 ft
10 m (28.5-29.0 MHz)	42 ft 9 in	
10 m (29.0-29.5 MHz)	42 ft	

207 - Broadside Collinear Curtain Array for 20m

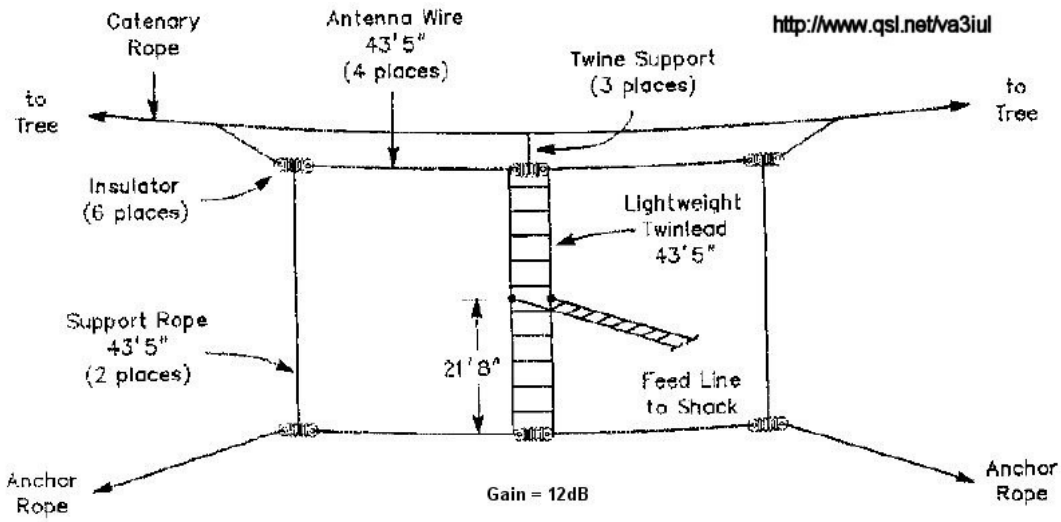

208 - Shrunk Loop Antenna for 80m, 40m

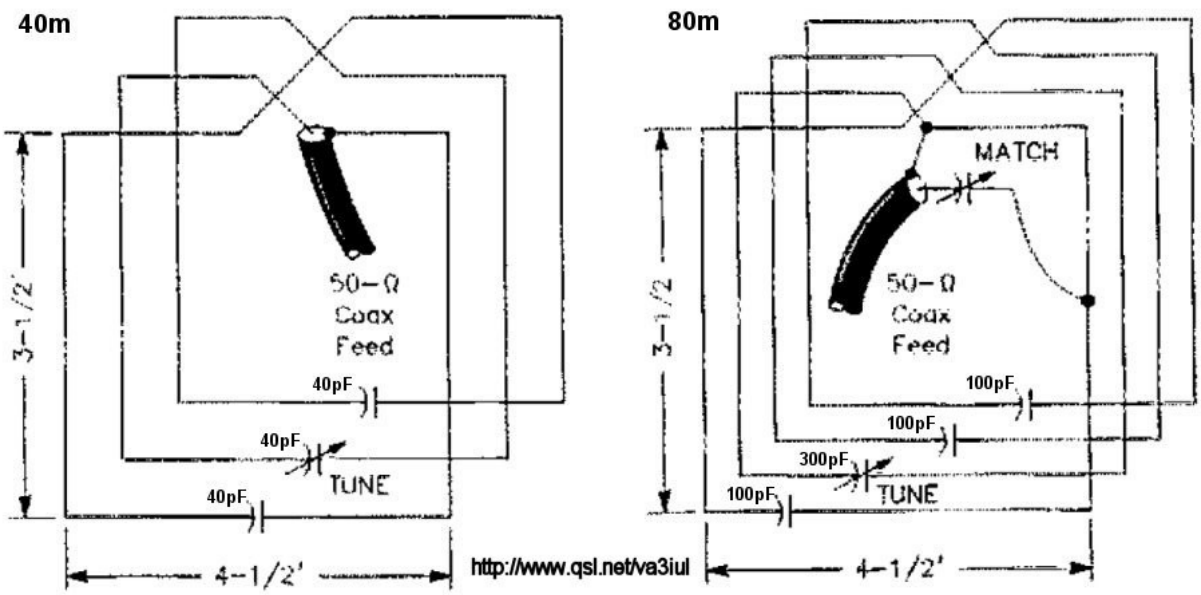

209 - λ/3 Multiband Dipole for 40m, 20m, 17m, 15m, 13m, 10m

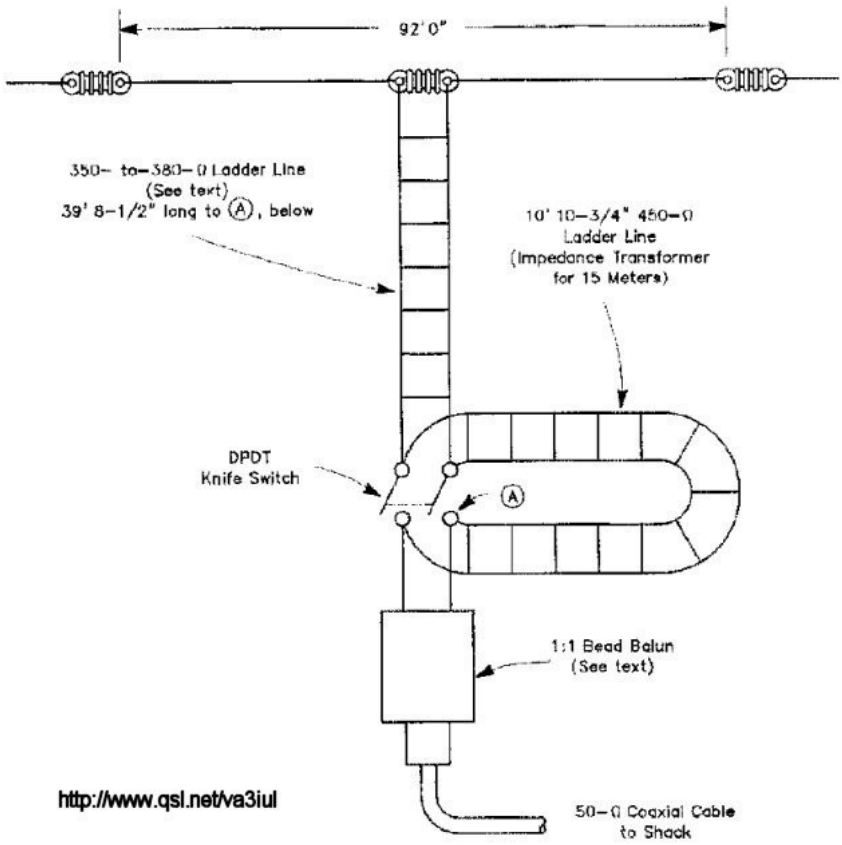

210 - K3LR Sloper Antenna Gain=3dB for 160m

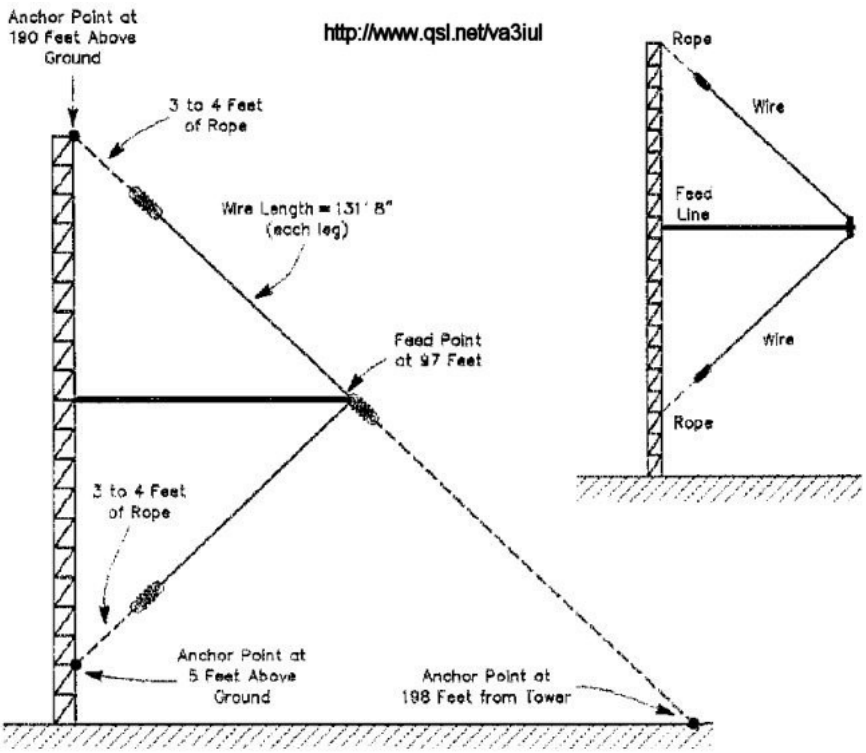

211 - Mini Folded Vertical Monopole Antenna for 160m, 80m, 40m

0.19λ MINI – MONOPOLE		
FREQ.(mc/s)	HEIGHT (H)	TUNING COIL (L)
1.825 1.925	100' 90'	4.5 uH
3.5 4.0	51' 46'	2.2 uH
7.0	25'6"	1.1 uH

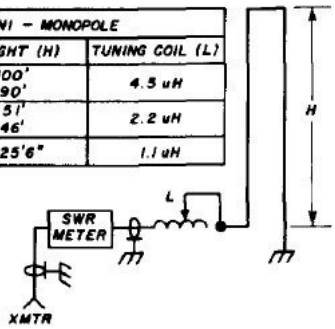

0.075λ MINI MONOPOLE	
FREQ.(mc/s)	HEIGHT (H)
1.825 1.925	40' 36'
3.5 4.0	20' 18'
7.0	10'

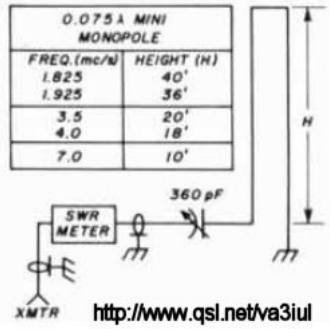

212 - Three Band Dipole for 80m, 40m, 20m

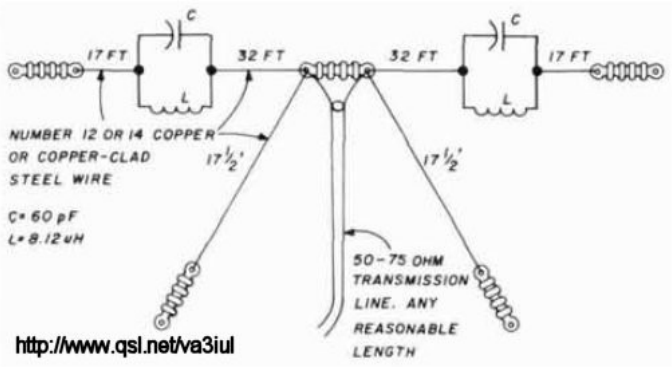

213 - Stub Matched Dipole Antenna

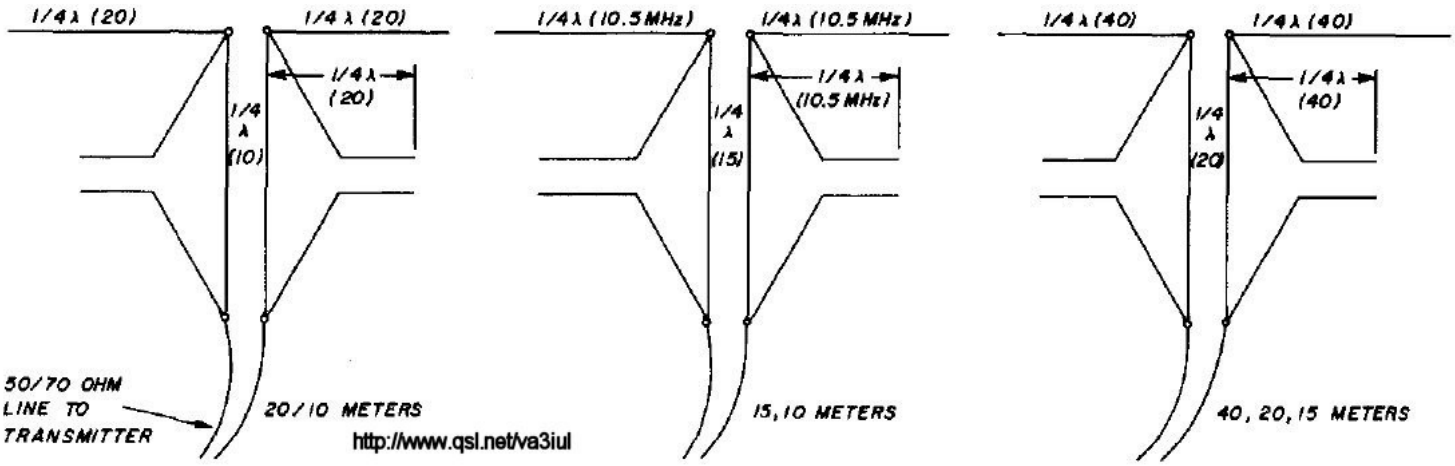

214 - Inverted-Vee Antenna with Bazooka Match

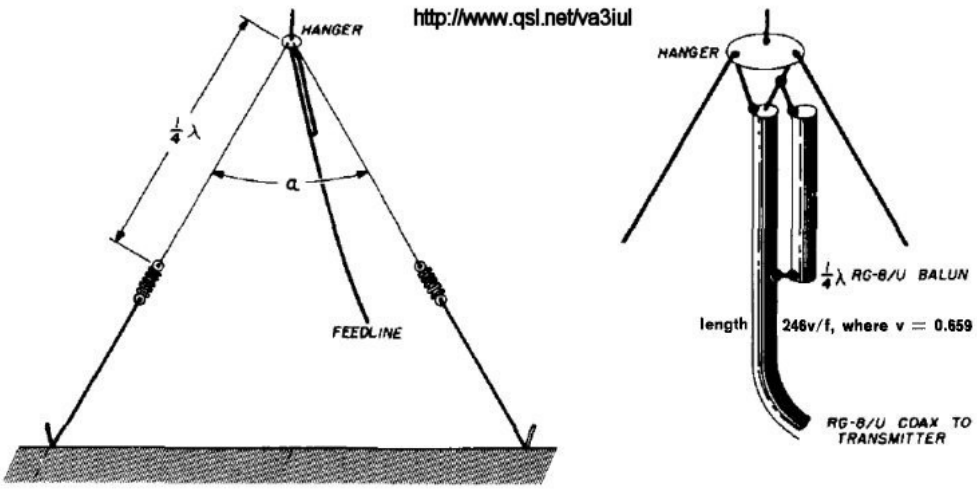

215 - Multiband Long Wire Antenna for 40m, 20m, 15m, 10m

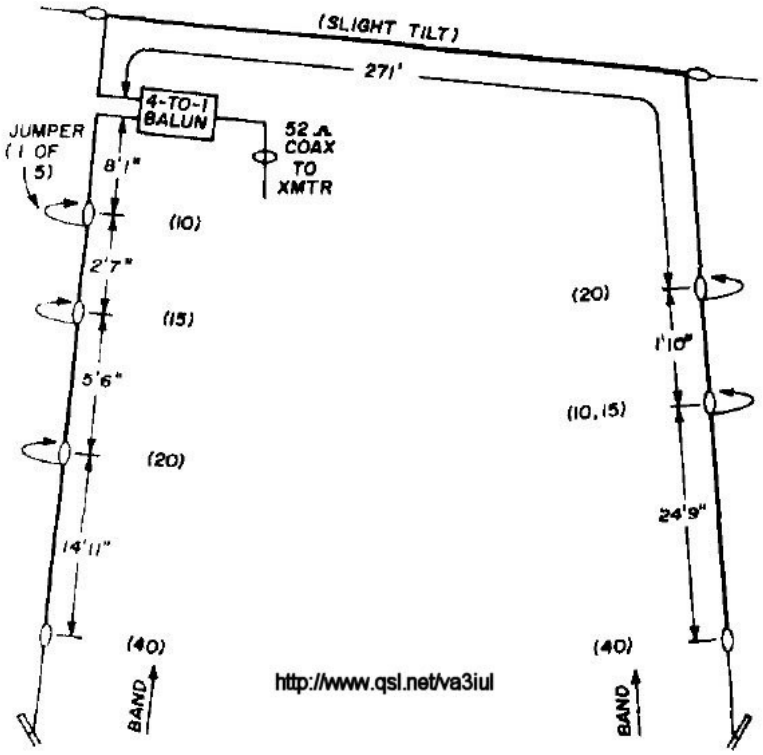

216 - Converted Vee Antenna for 80m, 40m

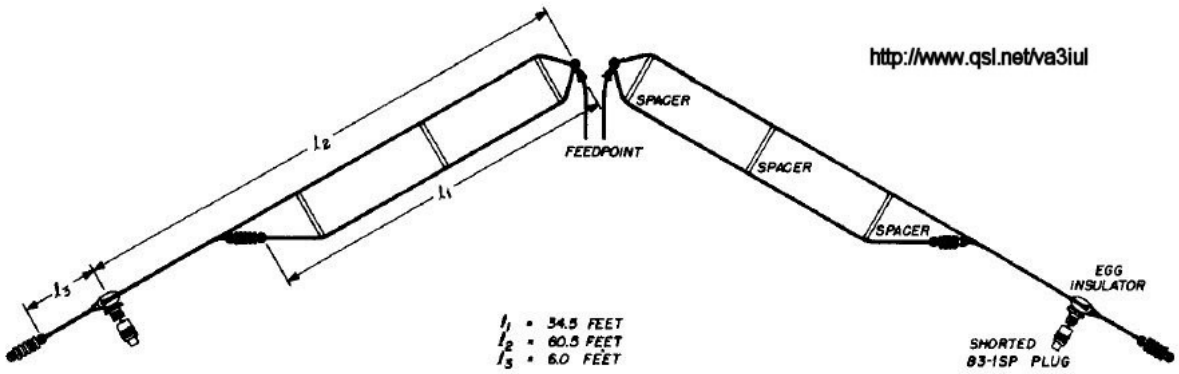

217 - Swiss Quad Antenna for 20m, 15m, 10m

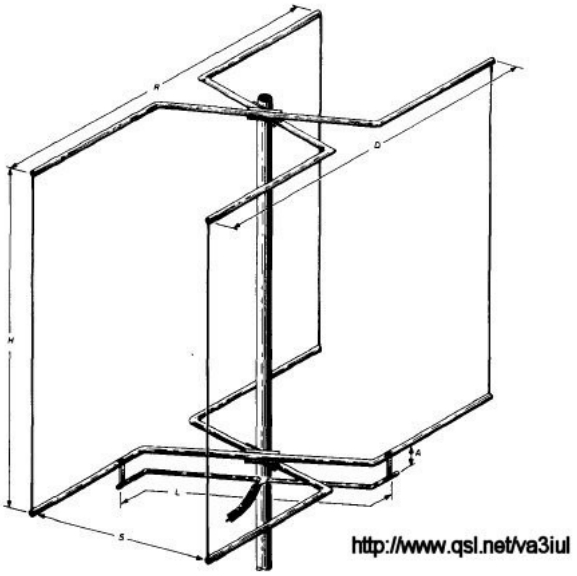

Dimensions for the Swiss quad (in inches).

frequency (MHz)	reflector horizontal (R)	radiator horizonal (D)	vertical (H)	spacing (S)	gamma length (L)	gamma spacing (A)
14.05	248	223½	236	84	188½	4¼
14.2	245	221	233	83	186½	4¼
21.05	165	149	157	56	126	2½
21.2	162½	148	155½	55½	124½	2½
28.05	124	112	118	42	94½	2
28.5	122	110	116	41½	93	2

218 - Japanese Quad Antenna for 20m, 15m, 10m

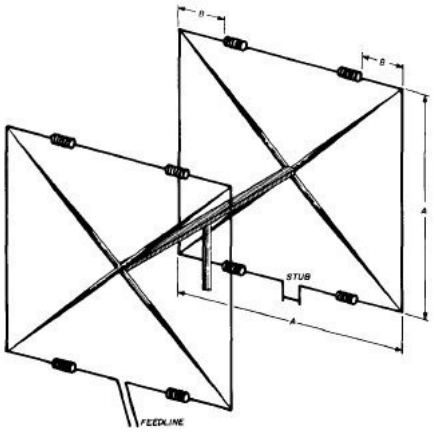

http://www.qsl.net/va3iul

Construction details of the Japanese quad (in inches).

frequency (MHz)	quad side (A)	spacing	coil location (B)	coil (μH)	winding info
14	152	101	38	3.0	17½ turns no. 14, 1½" diameter, 5" long
21	98	67	24½	2.0	11 turns no. 14, 1½" diameter, 3½" long
28	77	50	19¼	1.5	9½ turns no. 14, 1½" diameter, 3½" long

219 - Seven-Elements Triangle Beam Antenna for 20m

http://www.qsl.net/va3iul

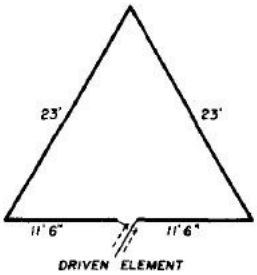

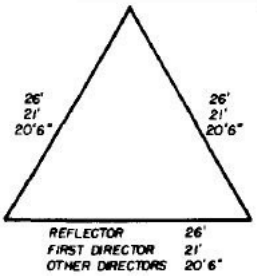

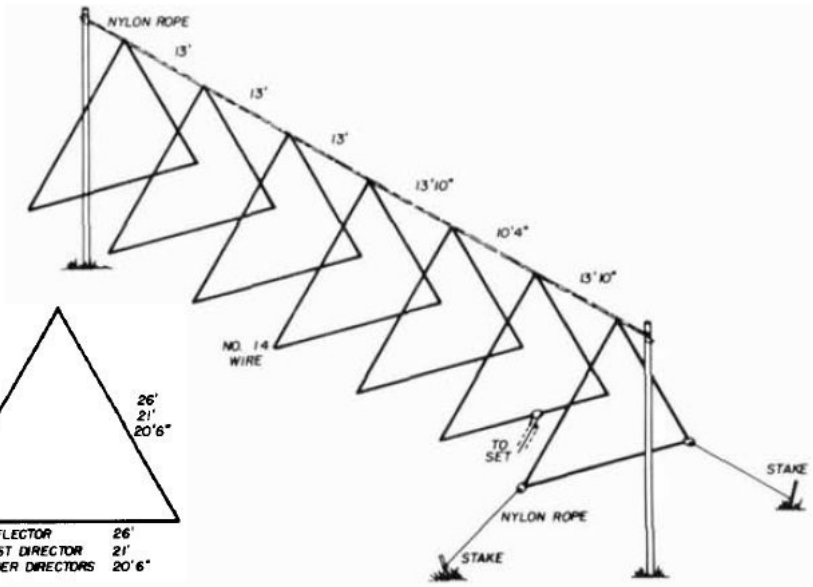

220 - Log Periodic Wire Antenna for 40m

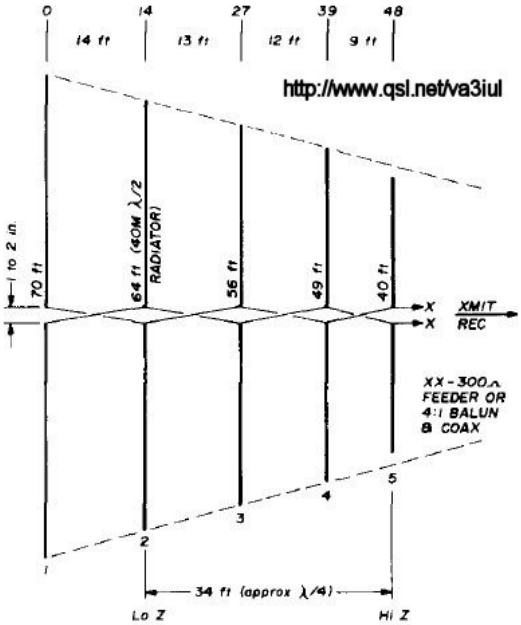

221 - Three-Elements 90-degrees Wire Beam for 20m

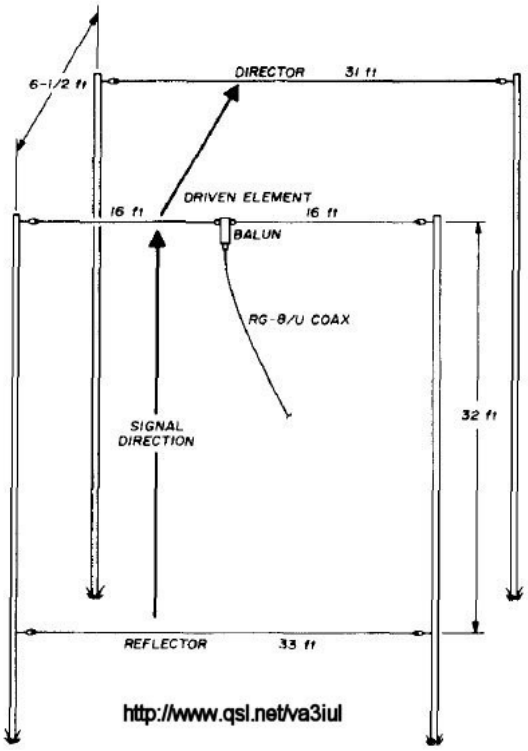

222 - Two-Elements Wire Beam for 20m

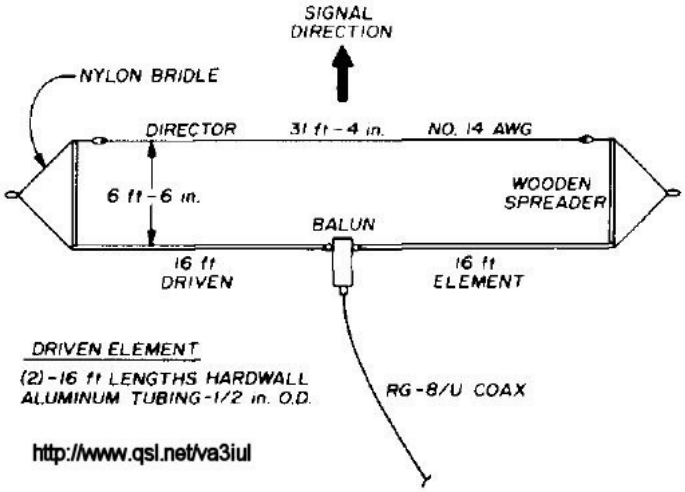

223 - Suitcase-Fit Dipole Antenna for 80m, 40m, 20m

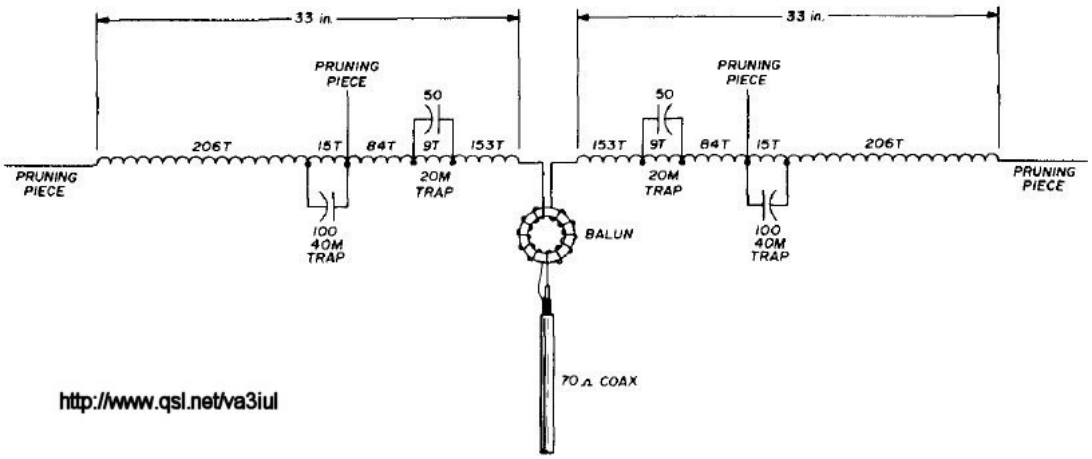

224 - Multiband Coaxial Dipole for 80m, 40m

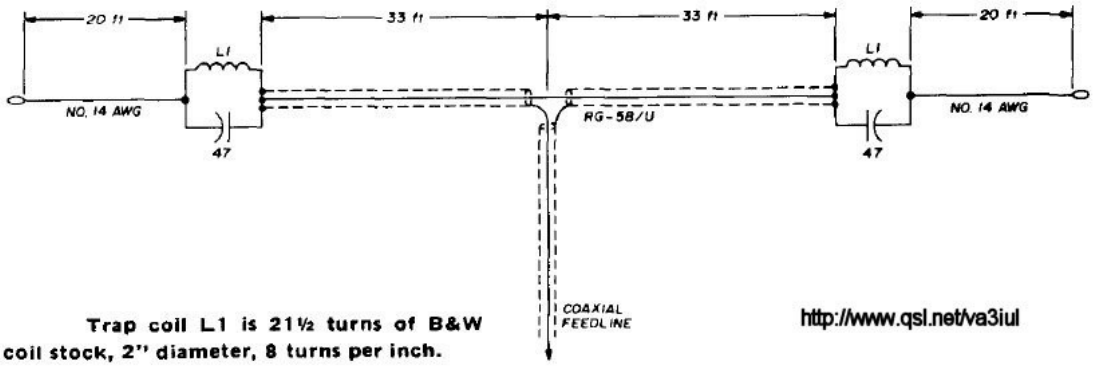

Trap coil L1 is 21½ turns of B&W coil stock, 2" diameter, 8 turns per inch.

225 - Vertical Log Periodic Antenna for 80m, 40m

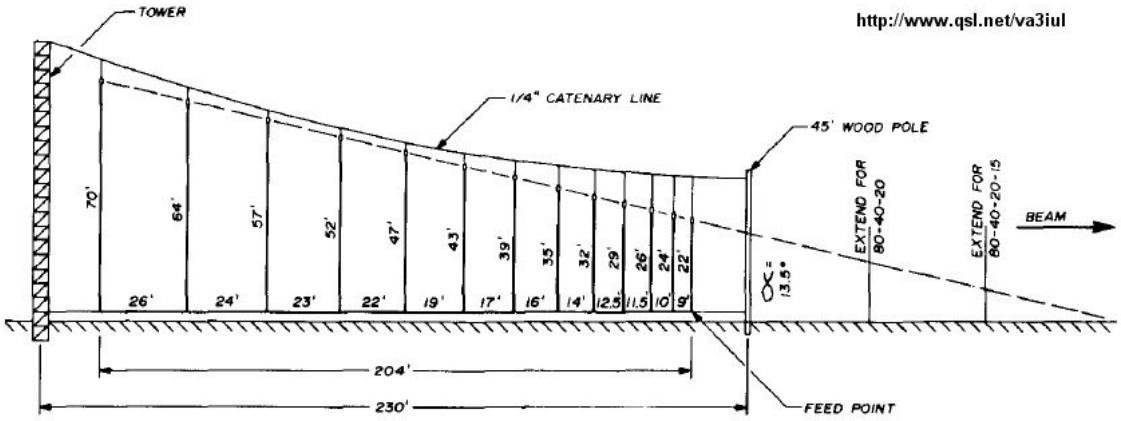

226 - Inverted Vertical Log Periodic Antenna for 40m

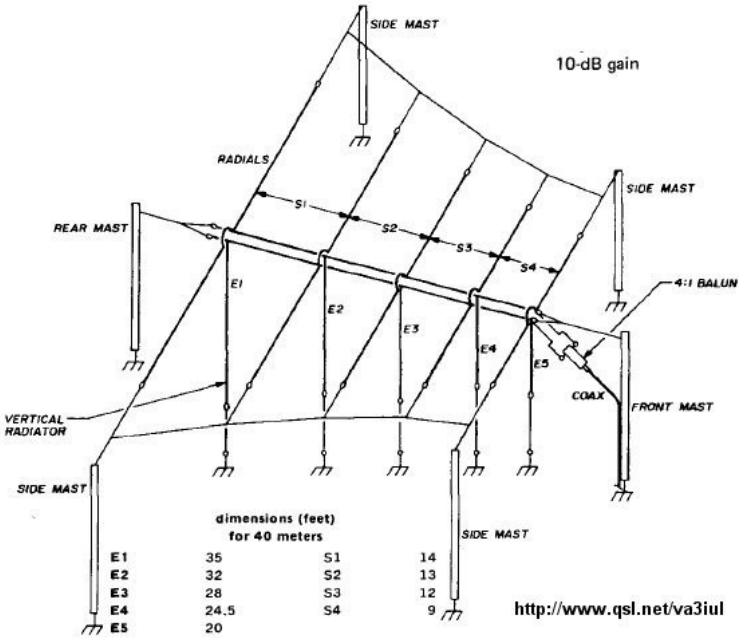

227 - Double Extended Zepp Antenna Gain=7dB for 15m

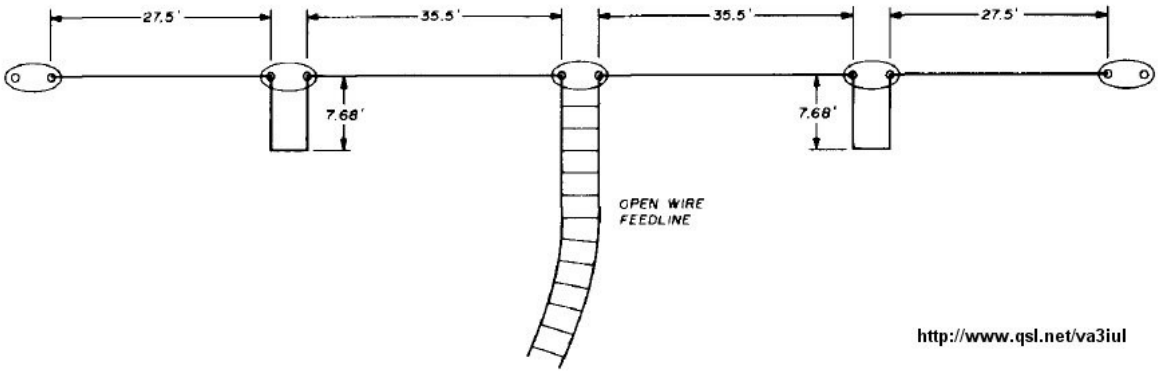

228 - Double Lazy-H Antenna G=10dB for 70cm

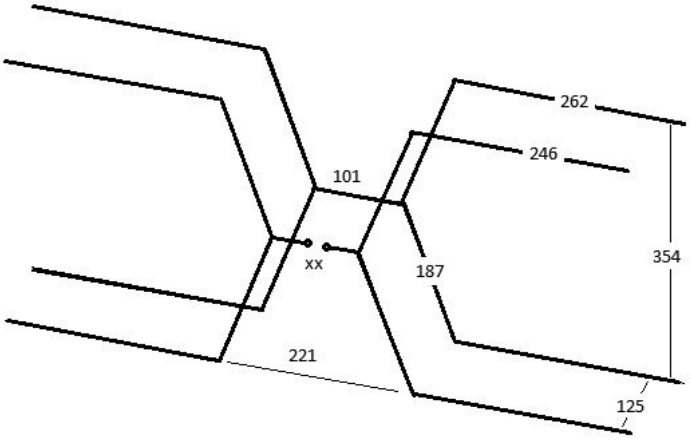

10.8 dBd 21 dB F/B
xx - 50 Ohm, distance ~5mm
SWR = 1 @ 435 MHz
Material 3-5 mm dia aluminium

http://www.qsl.net/va3iul

---

229 - Wire Log Periodic Antenna G=12dB for 15m, 20m

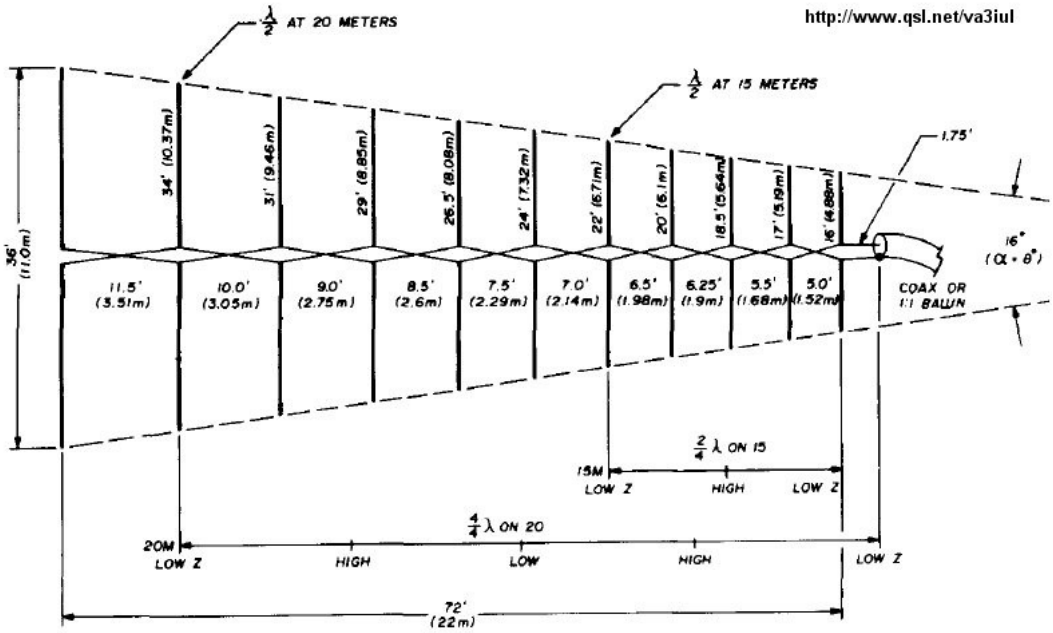

---

230 - Five-Elements Vertical Log Periodic for 80m, 40m, 20m

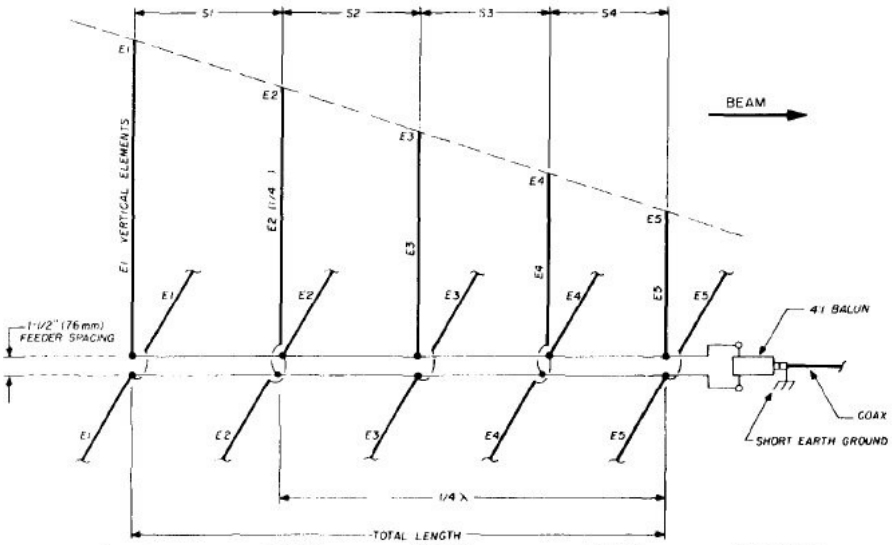

element	3.5-4.0[1]	3.8-4.0[2]	7.0-7.3[2]	14.0-14.35[1]
E1	70' (21.4 m)	65' (19.8 m)	35' (10.7 m)	17.5' (5.3 m)
E2	67' (20.4 m)	62' (18.9 m)	33' (10.0 m)	16.5' (5.0 m)
E3	58' (17.7 m)	55' (16.8 m)	28' (8.5 m)	14.0' (4.3 m)
E4	50' (15.3 m)	45' (13.7 m)	24.5' (7.5 m)	12.2' (3.7 m)
E5	43' (13.1 m)	40' (12.2 m)	20' (6.1 m)	10.0' (3.0 m)
S1	30' (9.2 m)	26' (7.9 m)	14' (4.3 m)	7.0' (2.1 m)
S2	27' (8.2 m)	24' (7.3 m)	13' (4.0 m)	6.5' (2.0 m)
S3	24' (7.3 m)	23' (7.0 m)	12' (3.7 m)	6.0' (1.8 m)
S4	19' (5.8 m)	18' (5.5 m)	9' (2.7 m)	4.5' (1.4 m)
total length	100' (30.5 m)	91' (27.8 m)	48' (14.6 m)	24' (7.3 m)
mast height	80' (24.4 m)	75' (22.9 m)	50' (15.3 m)	30' (9.2 m)
pole height	45' (13.7 m)	40' (12.2 m)	25' (7.6 m)	20' (6.1 m)

http://www.qsl.net/va3iul

---

231 - Sloping Delta Loop Antenna for 40m

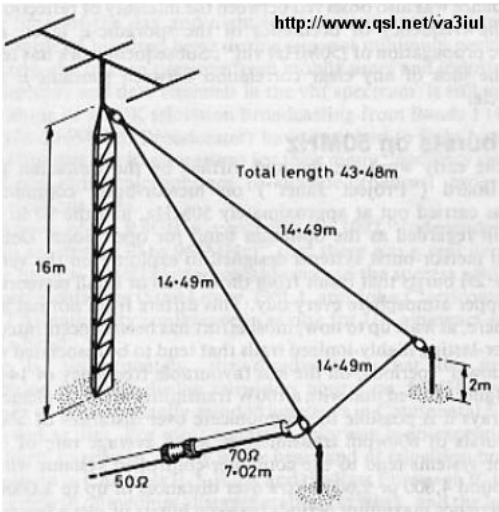

---

232 - Doublet Antenna for 160m

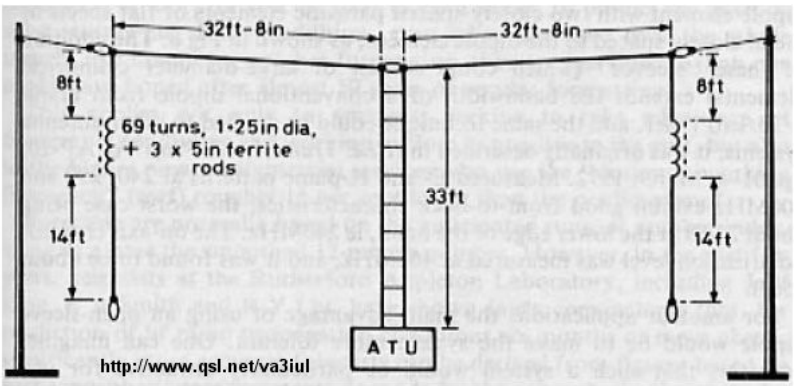

---

233 - Log Periodic Wire Beam for 40m

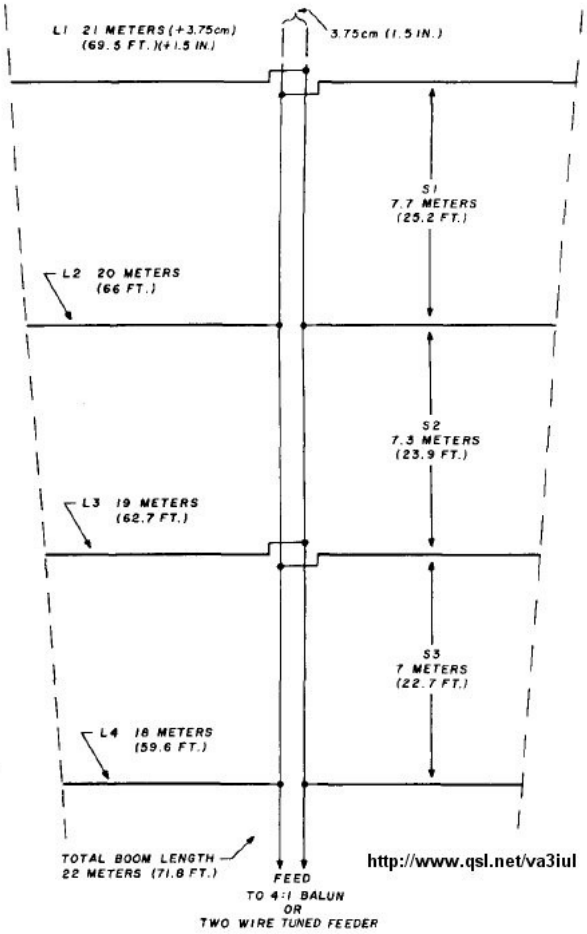

---

234 - G3LDO Wire Beam Antenna for 20m, 15m, 10m

http://www.qsl.net/va3iul

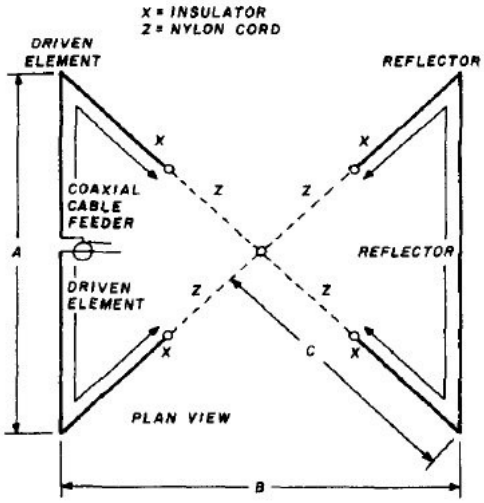

Data for the G3LDO wire-beam antenna. All dimensions are in inches and are for insulated wire; multiply by 1.04 for uninsulated wire. Dimension C is approximate.

band	reflector	driven element	A	B	C	D
20	452	417	245	263	180	33
15	302	279	154	166	113	22
10	225	208	114	122	85	15

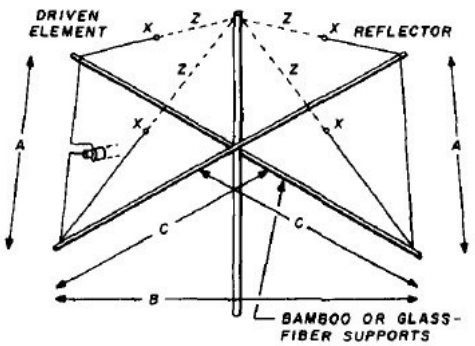

GENERAL CONSTRUCTION DETAILS
WITH DIMENSION REFERENCES

---

235 - Phased Delta Loop Array for 20m

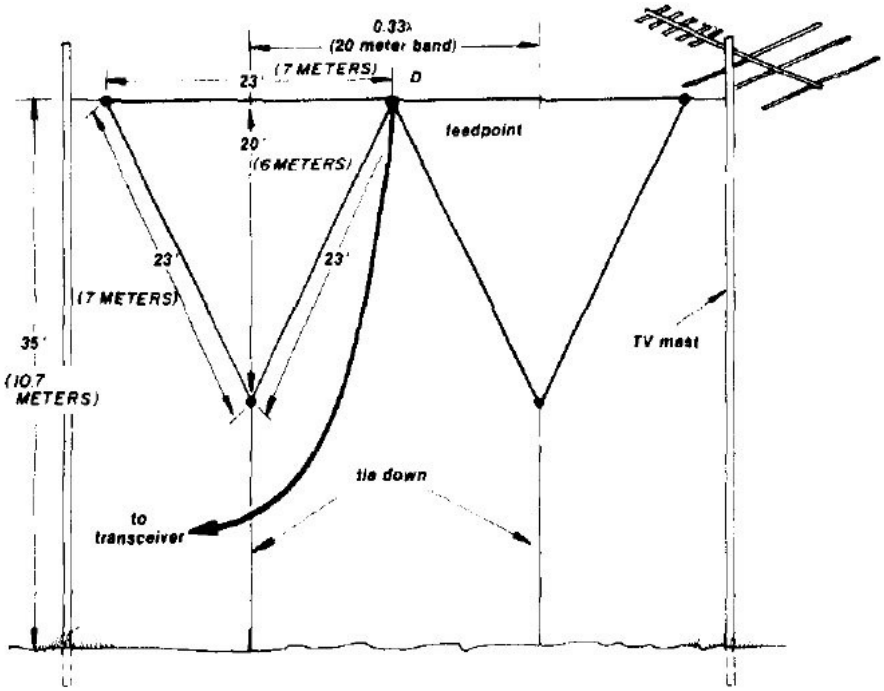

spacing wavelength	feet	(meters)	gain (dB)
0.33	23	(7)	2.0
0.40	27	(8)	2.8
0.50	34	(10)	4.0
0.65	44	(13)	4.8

http://www.qsl.net/va3iul

236 - Dual Band V-dipole for 80m, 40m

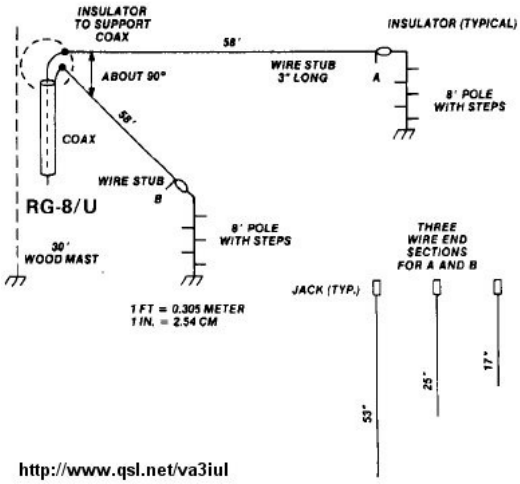

http://www.qsl.net/va3iul

237 - Collinear Array 5dB-Gain for 15m

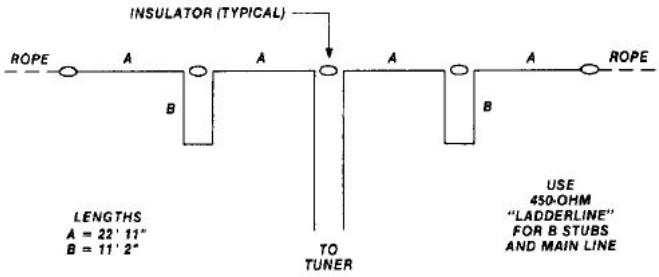

http://www.qsl.net/va3iul

1 FT = 0.305 METER
1 IN. = 2.54 CM

238 - Two-Band Quad Loop Antenna 80m, 40m

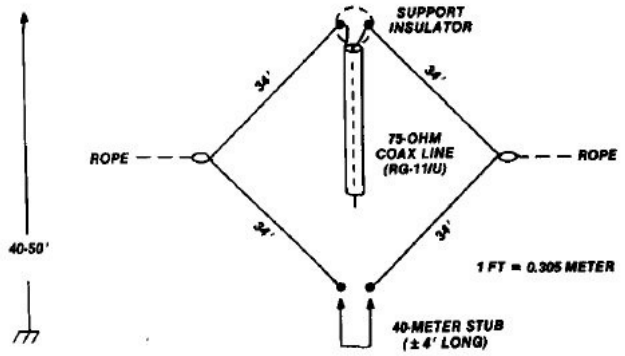

http://www.qsl.net/va3iul

---

239 - K7CW Quad Antenna

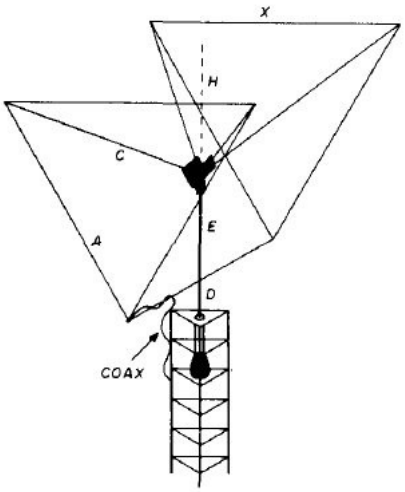

http://www.qsl.net/va3iul

$X = \frac{1030}{9.84F}$

Where F = design frequency of antenna (3X = total distance around reflector loop).

$A = \frac{1005}{9.84F}$

3A = total distance around driven element loop.

$H = \frac{X}{2}$

= distance from main hub to top of antenna (the imaginary plane which contains the tips of all four spreaders).

$D = .2\lambda$

where λ = wavelength at design frequency.
D = element spacing
= length of bottom spreader.

$E = \sqrt{X_2 - H^2} - H$

= distance from bottom spreader to main hub.

$C = \sqrt{2H^2 + \left(\frac{D}{2}\right)^2}$

= distance from hub to where loop is attached to main spreader.

antenna design frequencies (in meters)

	3.575 MHz	3.8 MHz	7.05 MHz	7.2 MHz	14.075 MHz
X	29.2722	27.5389	14.8437	14.5344	7.43503
Y	87.8165	82.6168	44.5311	43.6033	22.3051
A	28.5617	26.8705	14.4834	14.1817	7.25457
B	85.685	80.6116	43.4502	42.5450	21.7637
H	14.6361	13.7695	7.42184	7.26722	3.71751
D	16.7832	15.7895	8.51064	8.33333	4.26288
E	10.7144	10.0800	5.43317	5.31998	2.72141
C	22.3349	21.0124	11.3258	11.0899	5.67298

	21.3 MHz	28.15 MHz	28.6 MHz	29 MHz	50.05 MHz
X	4.91305	3.71751	3.63902	3.60855	2.09087
Y	14.7392	11.1525	10.9771	10.8257	6.27261
A	4.79380	3.62728	3.57021	3.52097	2.04012
B	14.3814	10.8818	10.7106	10.5629	6.12036
H	2.45653	1.85876	1.82951	1.80428	1.04543
D	2.81690	2.13144	2.09790	2.06897	1.19880
E	1.79830	1.36070	1.33929	1.32082	.765311
C	3.74870	2.83649	2.79186	2.75335	1.59535

Note: X = length of reflector loop side
Y = distance around reflector loop
A = length of driven element loop side
B = total distance around driven element loop
H = distance from hub to top of antenna
D = bottom spreader length = element spacing
E = distance from bottom spreader to main hub
C = distance from hub to where loop is attached to main spreader, that is, spreader length

---

240 - Broadband Short Dipole for 80m

http://www.qsl.net/va3iul

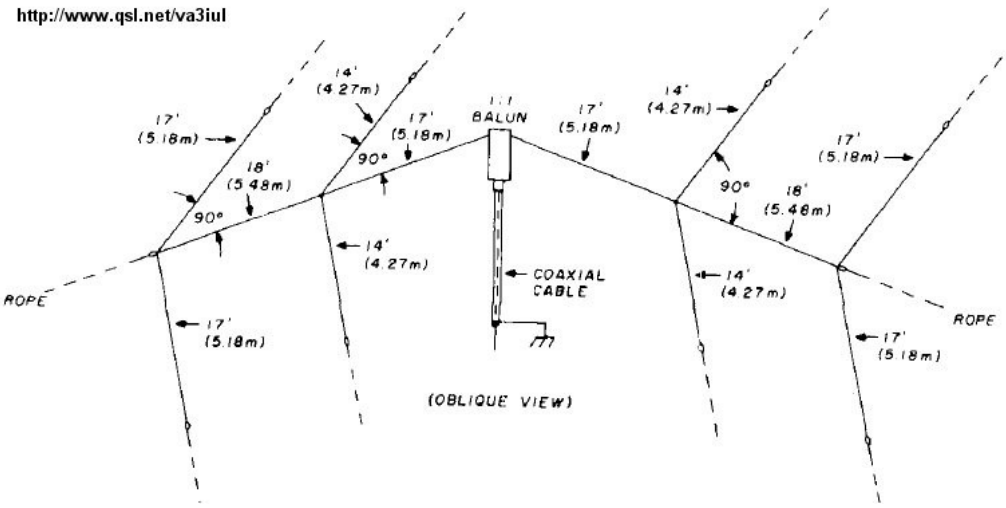

---

241 - Off-Center Fed Dipole for 40m, 20m, 10m

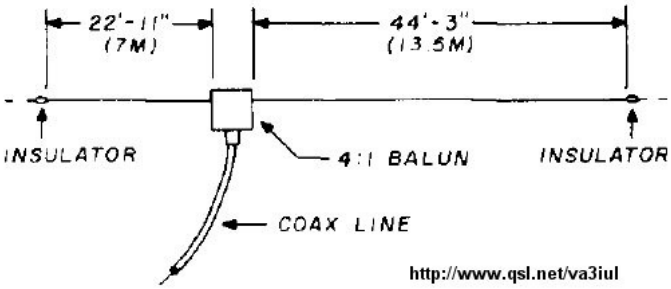

http://www.qsl.net/va3iul

242 - Broadband Sloper Antenna for 80m

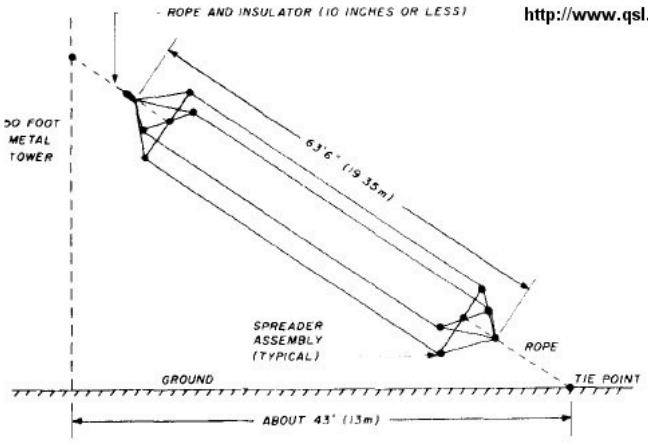

http://www.qsl.net/va3iul

80-meter WD4FAB broadband sloper. Spreader assemblies are made of 36-inch long fiberglass tubes. The four antenna wires are tied together about 24 inches past each spreader assembly. A nylon line may be required from the crossover point of the spreader to the outer insulator to prevent bowing. The SWR plot of the antenna falls below 1.4-to-1 at 3.5 MHz; 1.25-to-1 at 3.8 MHz and 1.4-to-1 at 4.0 MHz. Feedpoint resistance of the antenna may be changed by altering the slope angle. The resonant frequency is adjusted by changing length — no climbing necessary!

243 - Two-Frequency Dipole Antenna for 80m

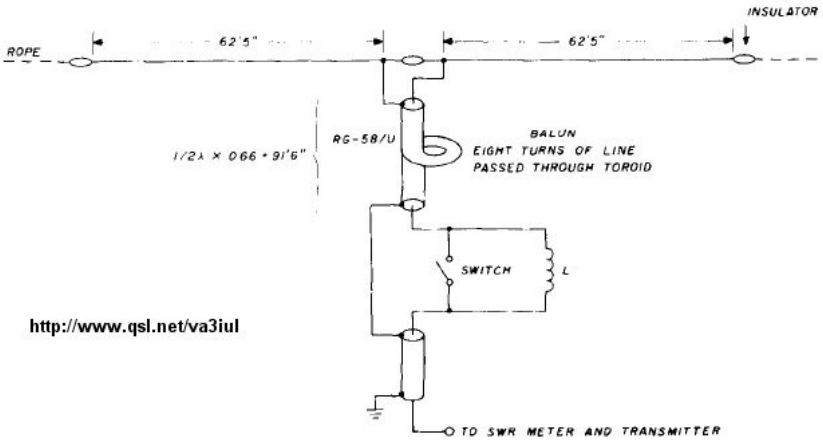

http://www.qsl.net/va3iul

The W6TC two-frequency dipole for 80 meters. Antenna is cut for resonance at high frequency end of band. A single loading coil for operation at the low frequency end of the band is placed an electrical half-wavelength down the transmission line. The line is decoupled from the antenna by a simple balun placed directly at the antenna insulator. Toroid is powdered iron material T-200 (2" OD) (1.25" ID), 2-mix (red, μ = 10 (Amidon T-200-2), or equivalent.

244 - Top Loaded Vertical Antenna for 160m

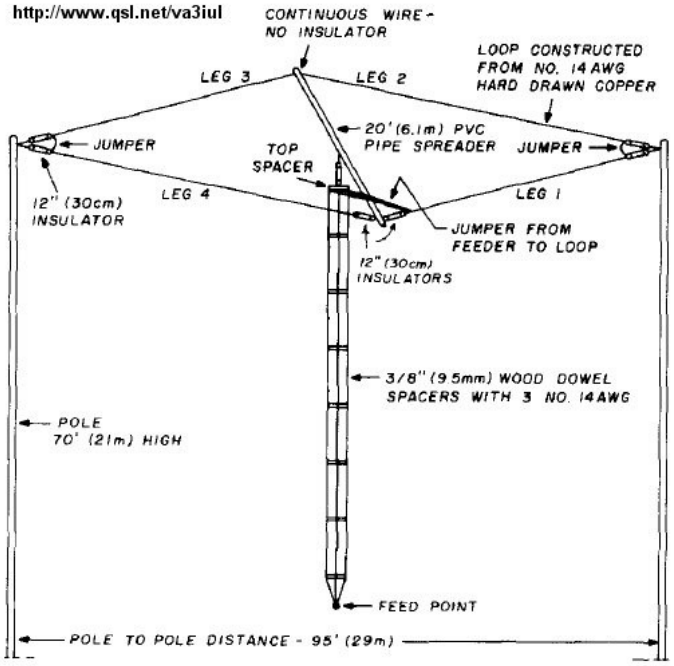

245 - Two Loop Beam Antenna for 20m, 15m

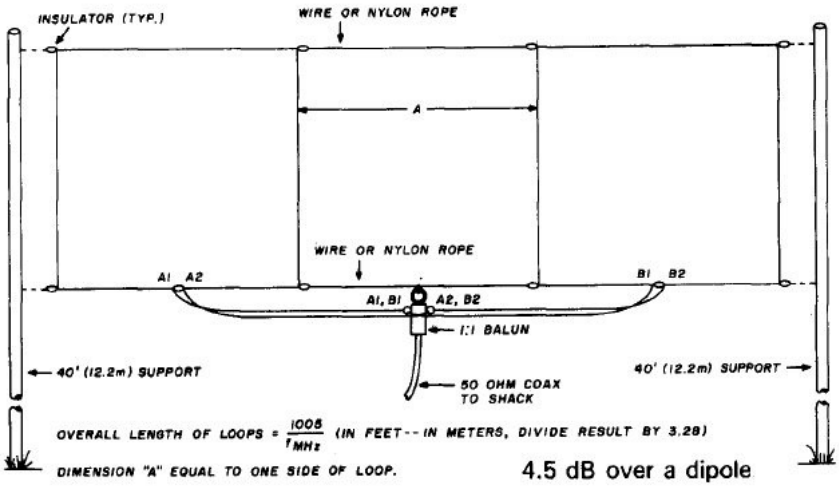

The W2TBZ loop beam. The phasing lines are made of 300-ohm TV line. Length of phasing line = $\frac{468}{f_{MHz}}$ × velocity factor of 300-ohm line. Balun is supported at center of lower nylon rope.

http://www.qsl.net/va3iul

246 - Corner-Fed Delta Loop Antenna for 80m, 40m, 20m

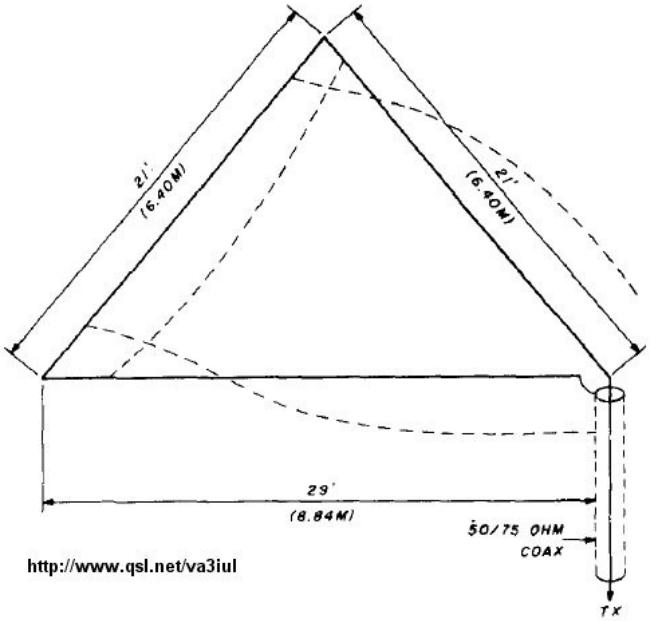

http://www.qsl.net/va3iul

DIMENSIONS FOR FULL-SIZE CORNER-FED DELTA LOOPS

frequency (MHz)	total loop circumference (feet)	(meters)	length of each side (feet)	(meters)	length of base (feet)	(meters)
3.600	279 ft. 2 in.	(85.09)	82 ft.	(24.99)	115 ft. 2 in.	(35.10)
7.075	142 ft. 0 in.	(43.28)	42 ft.	(12.80)	58 ft. 0 in.	(17.68)
14.150	71 ft. 0 in.	(21.64)	21 ft.	(6.40)	29 ft. 0 in.	(8.84)

247 - Loaded Delta Loop Antenna for 40m, 20m

http://www.qsl.net/va3iul

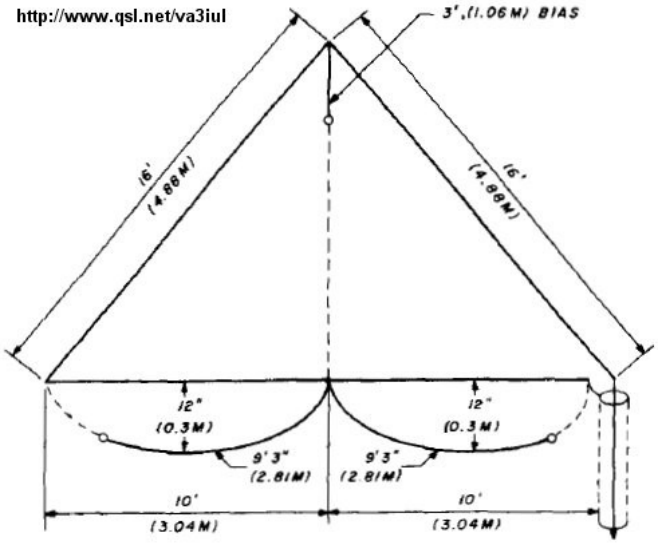

The final loaded loop for 14 MHz. All dimensions are doubled for operation on 7 MHz. Base loading wires are each 18 feet 4 inches (5.59 meters). The top loading wire is made taut by securing to base with thin light nylon cord.

248 - Compact Size Dipole for 80m

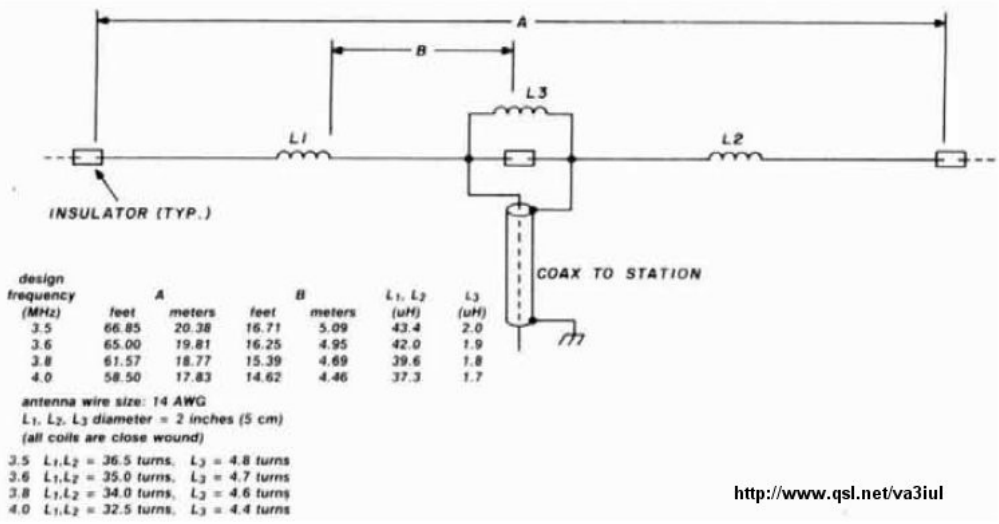

design frequency (MHz)	A feet	A meters	B feet	B meters	L_1, L_2 (uH)	L_3 (uH)
3.5	66.85	20.38	16.71	5.09	43.4	2.0
3.6	65.00	19.81	16.25	4.95	42.0	1.9
3.8	61.57	18.77	15.39	4.69	39.6	1.8
4.0	58.50	17.83	14.62	4.46	37.3	1.7

antenna wire size: 14 AWG
L_1, L_2, L_3 diameter = 2 inches (5 cm)
(all coils are close wound)

3.5 L_1,L_2 = 36.5 turns, L_3 = 4.8 turns
3.6 L_1,L_2 = 35.0 turns, L_3 = 4.7 turns
3.8 L_1,L_2 = 34.0 turns, L_3 = 4.6 turns
4.0 L_1,L_2 = 32.5 turns, L_3 = 4.4 turns

249 - JAWS 3dB Gain Antenna for 40m

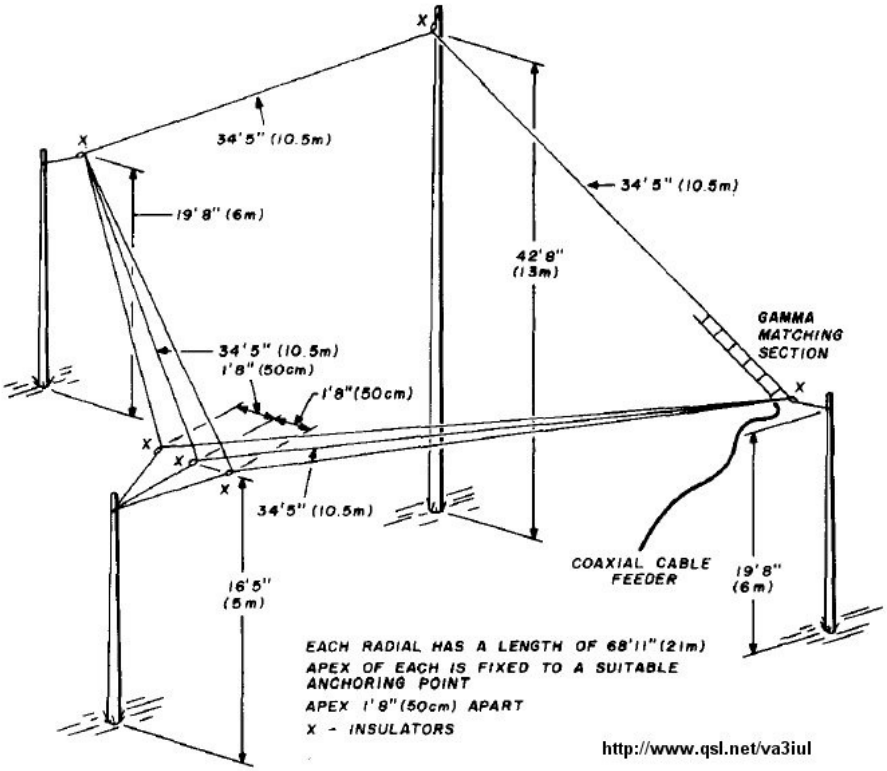

250 - Inverted-V Antenna for 160m

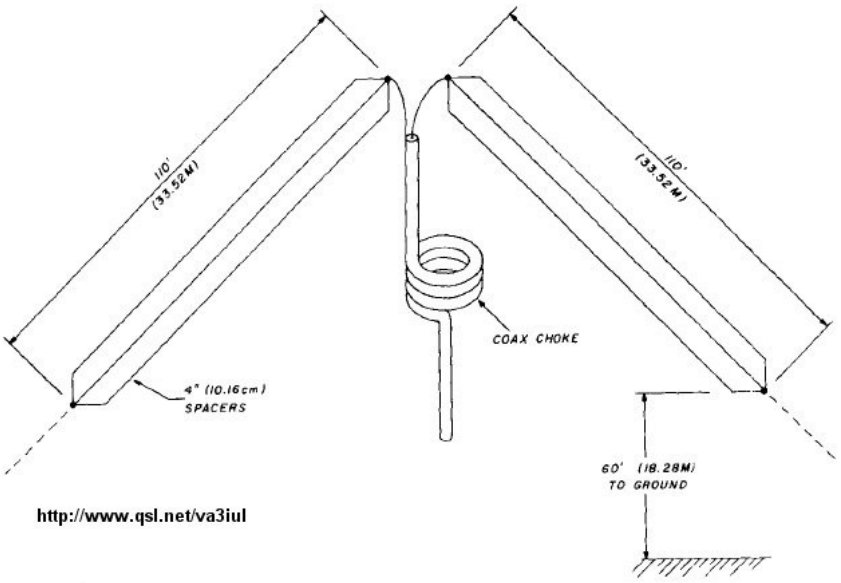

http://www.qsl.net/va3iul

The inverted-V antenna for 160 meters at VE7BS. Wires all lie in the same plane. Apex is at 105 feet (32 meters).

---

251 - Lazy-U Antenna for 160m

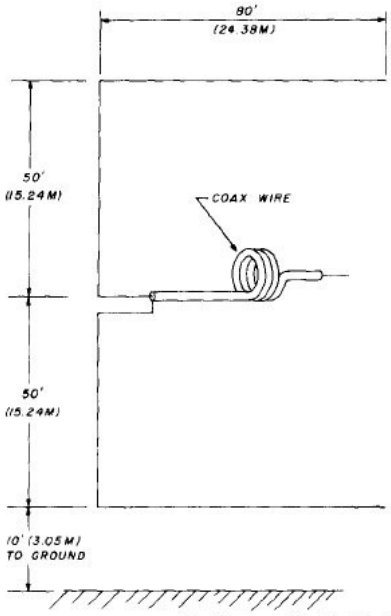

http://www.qsl.net/va3iul

---

252 - AF3V Compact Antenna for 160m

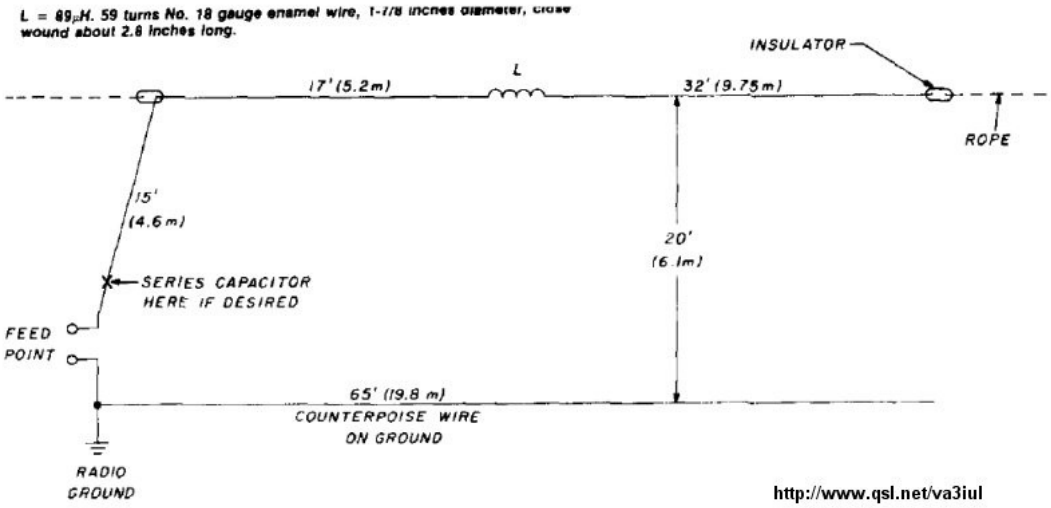

http://www.qsl.net/va3iul

---

253 - Hot Beam Wire Antenna for 40m

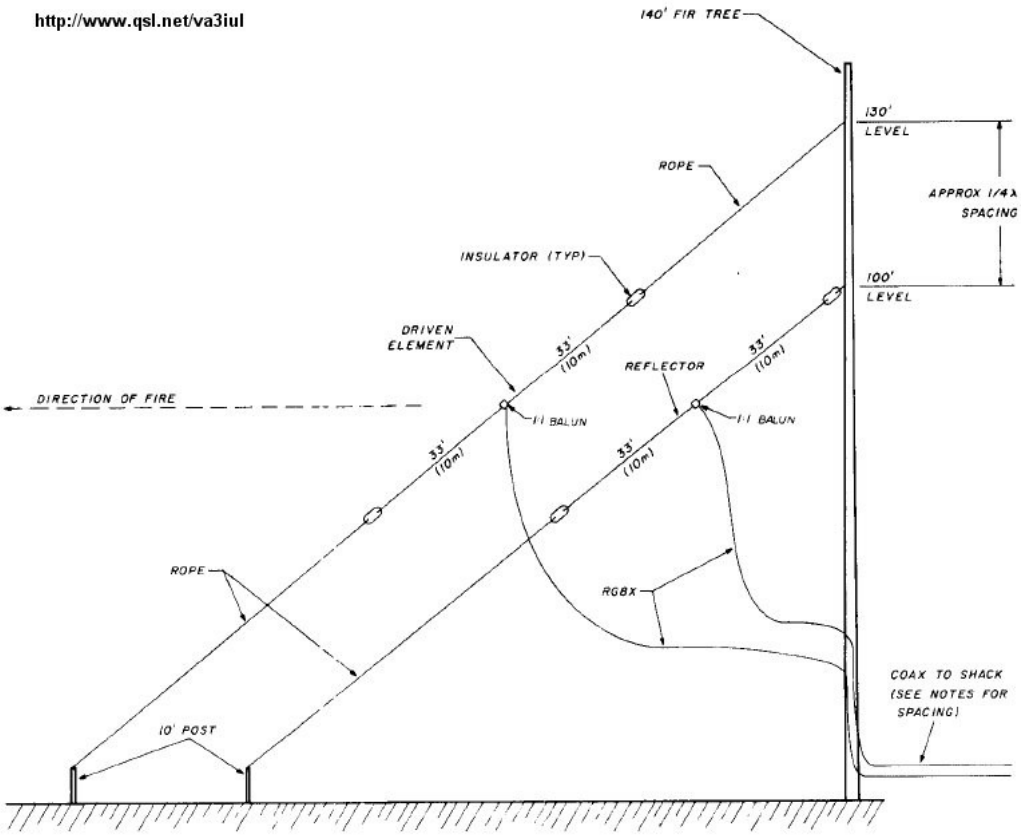

254 - Sloping Delta Loop for 40m

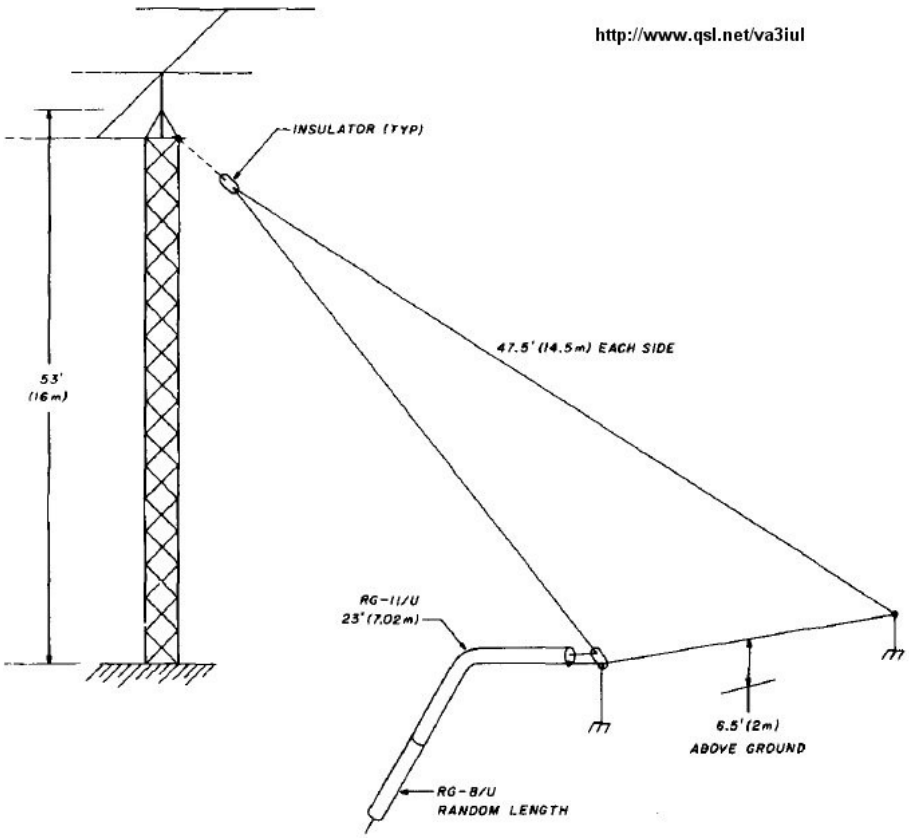

255 - K6FD Multiband Antenna with T-tuner

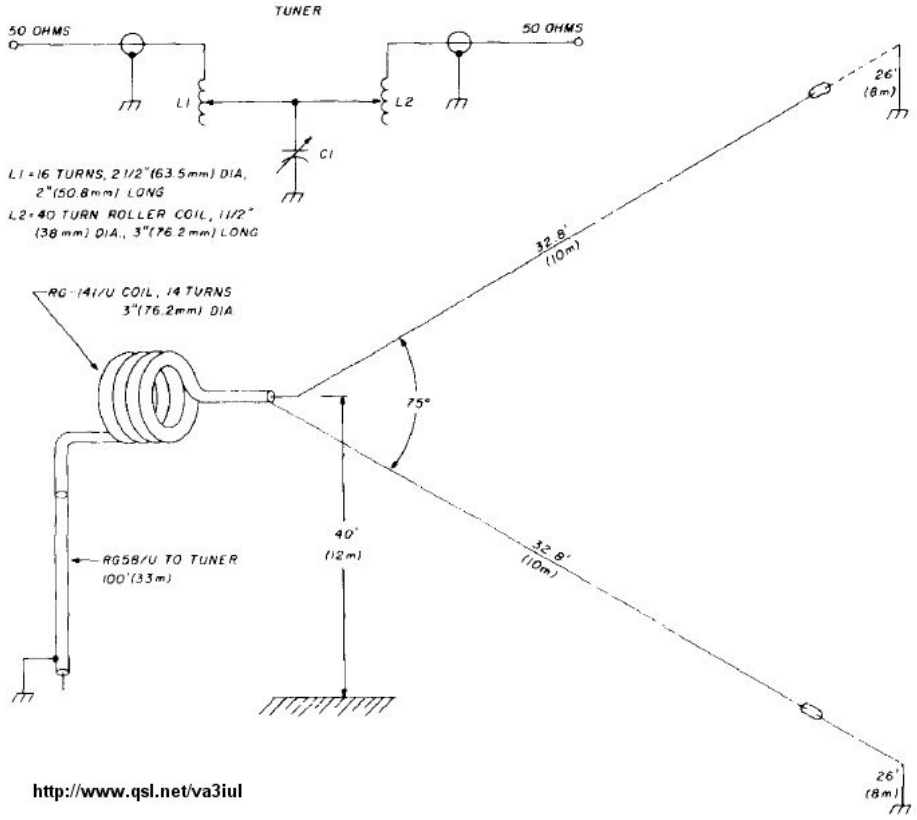

256 - Dual Band Dipole Antenna for 17m, 10m

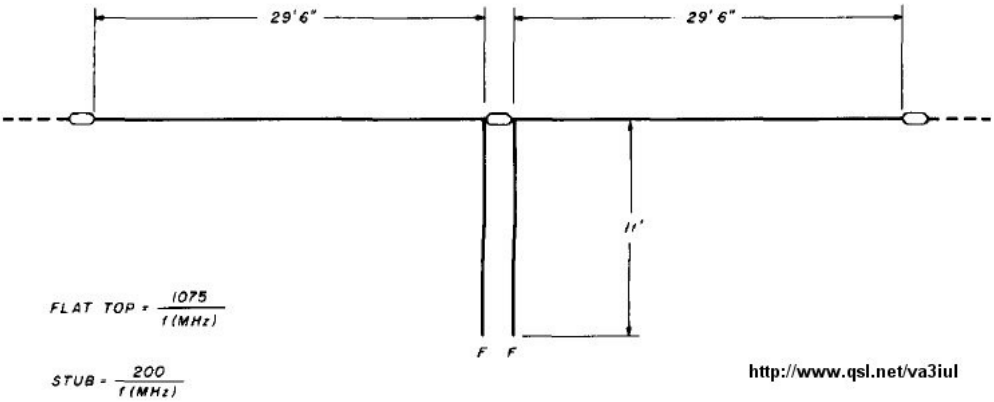

257 - Compact Travel Dipole Antenna for 10m, 15m, 20m

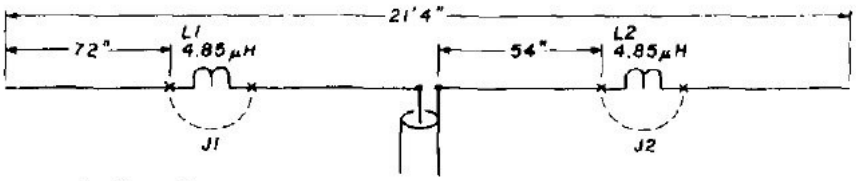

Loading coils:

L1,L2 24 turns 3/4-inch x 16 TPI coil stock (B&W No. 3011 or Air Dux 616T) or 14 turns 1-1/2 inch x 8 TPI coil stock (B&W No. 3018 or Air Dux No. 1008).

J1,J2 8-inch clip leads.

http://www.qsl.net/va3iul

258 - End-Fire Antenna for 160m, 80m, 40m, 20m

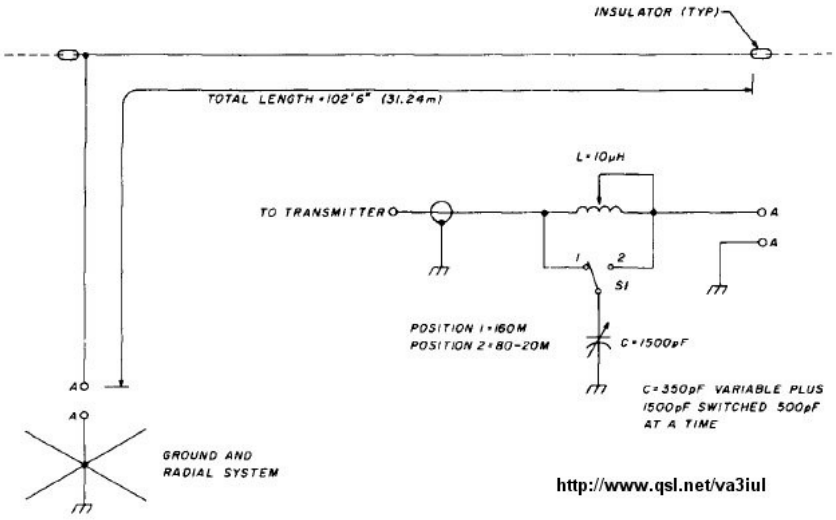

259 - Four Band Loop for 40m, 20m, 15m, 10m

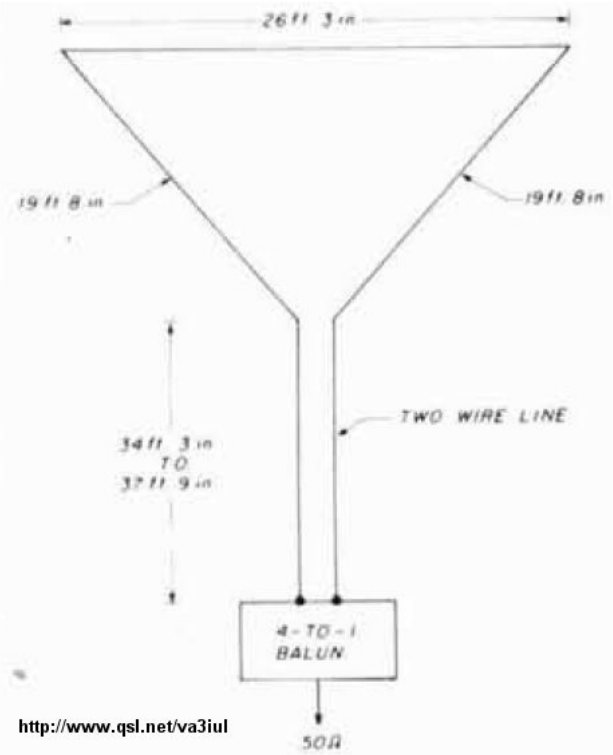

260 - Carolina Windom Antenna for 80 to 10m

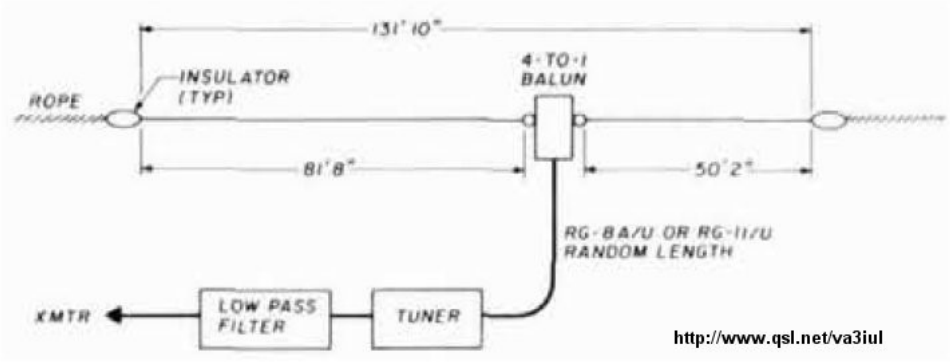

261 - Shortened Loaded Dipole for 40m

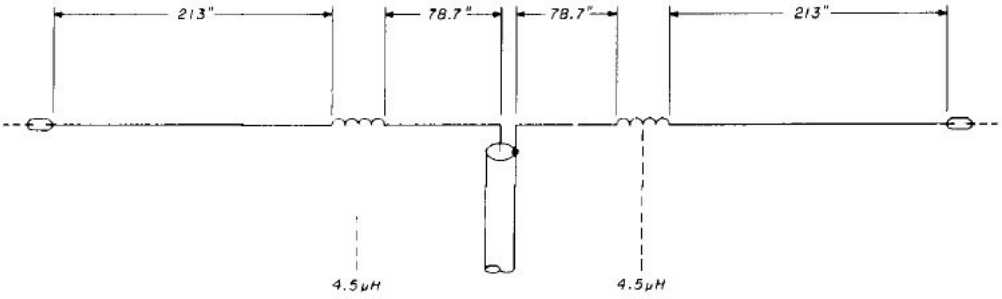

http://www.qsl.net/va3iul

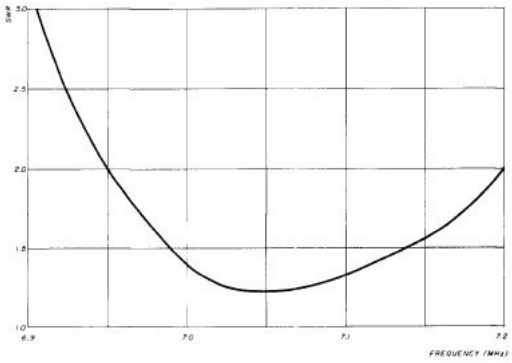

262 - Shortened Loaded Dipole for 80m

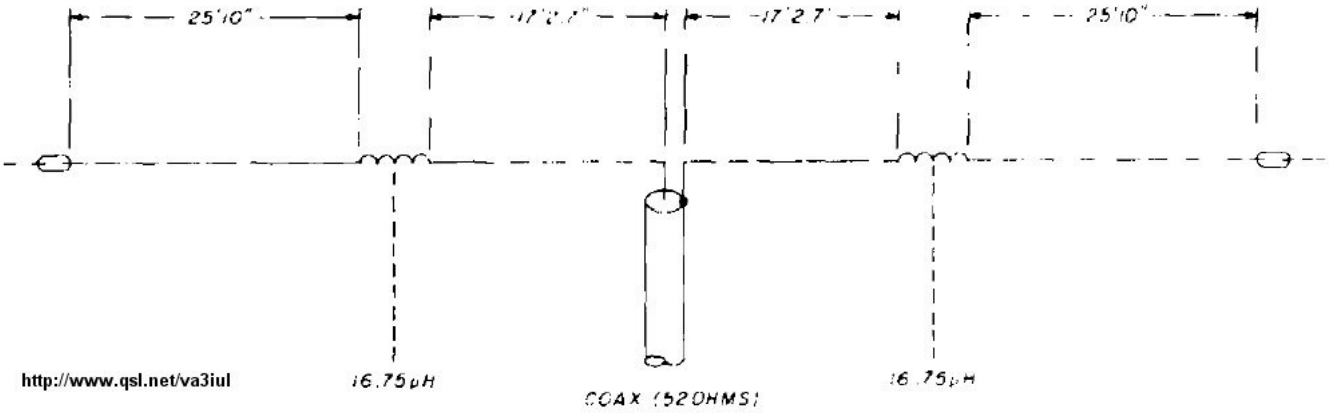

http://www.qsl.net/va3iul

263 - Low Radiation Angle Inverted Delta Loop for 80m

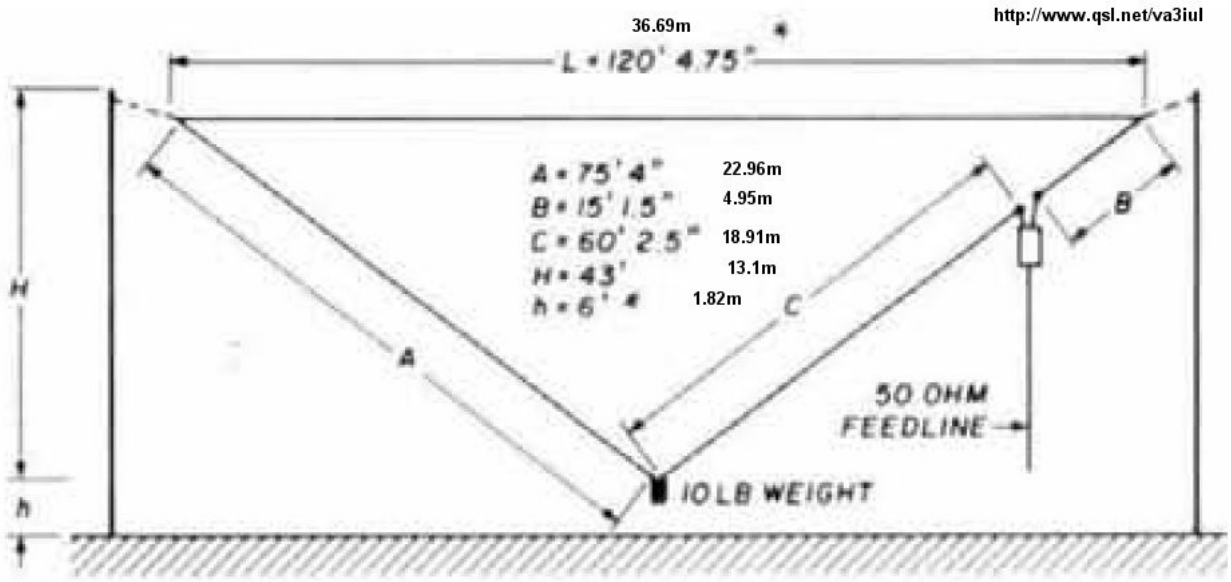

http://www.qsl.net/va3iul

264 - Compact Dipole Antenna for 40m, 15m

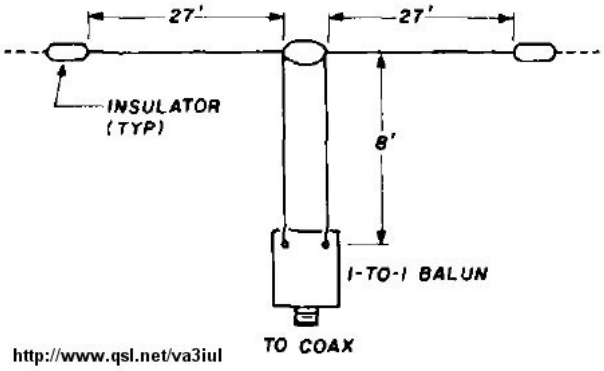

---

265 - Vertical Delta Loop for 40m to 10m

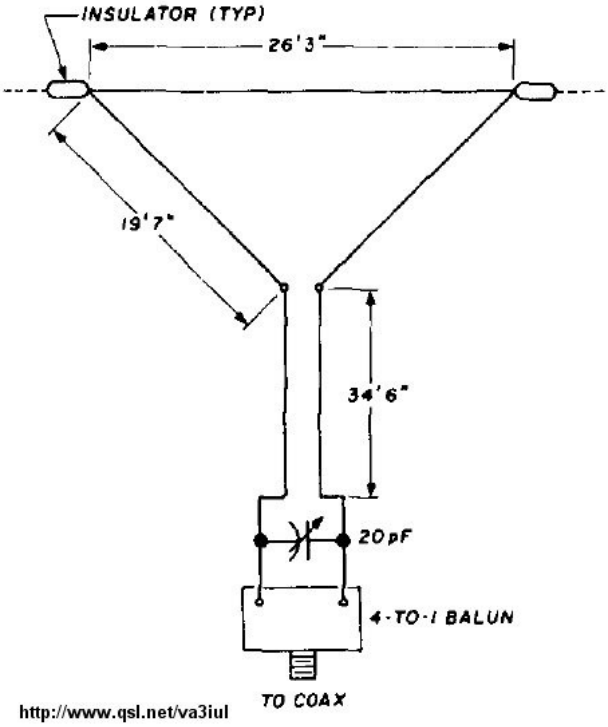

---

266 - Delta Loop Antenna for 17m

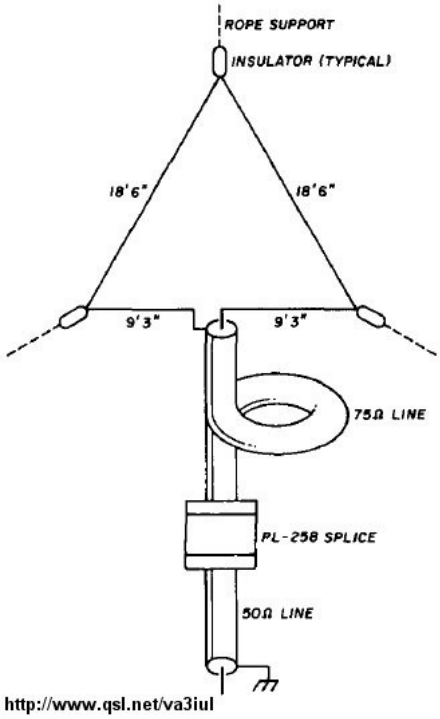

http://www.qsl.net/va3iul

---

267 - Bi-Square Beam Gain=3dBd for 17m

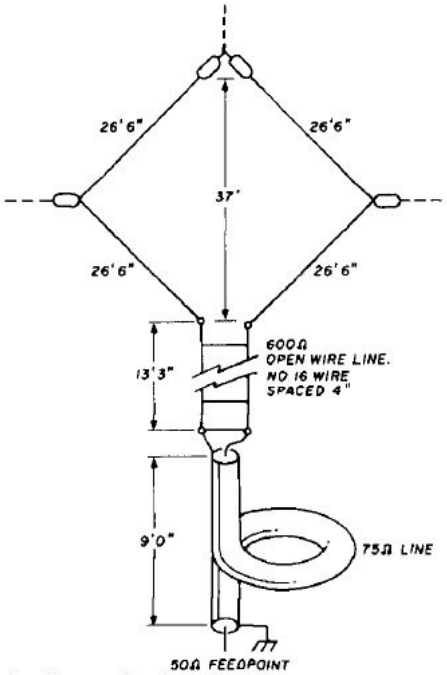

http://www.qsl.net/va3iul

---

268 -Trap Dipole Antenna for 17m,13m

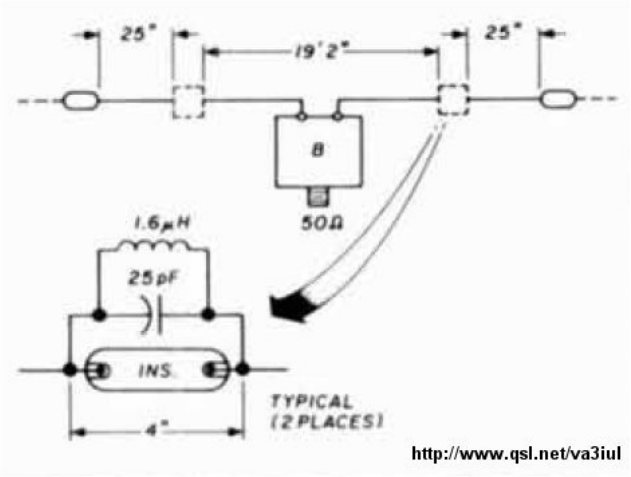

269 - Hanging Unipole Antenna for 160m, 80m

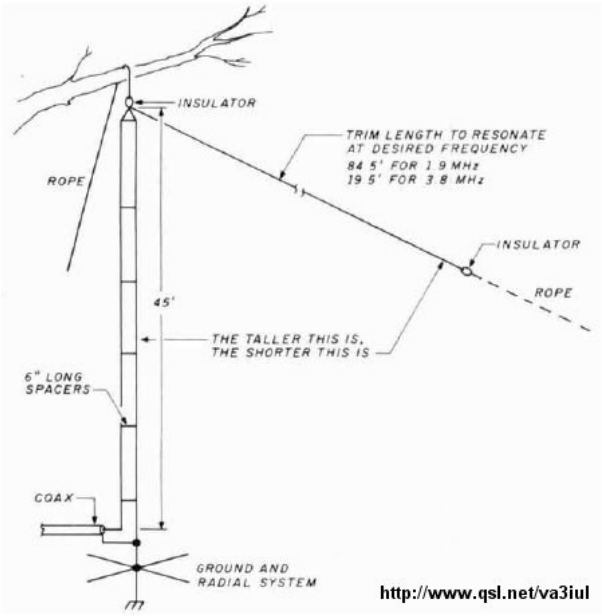

270 - Wideband Sloping Vee Antenna - 30m to 6m

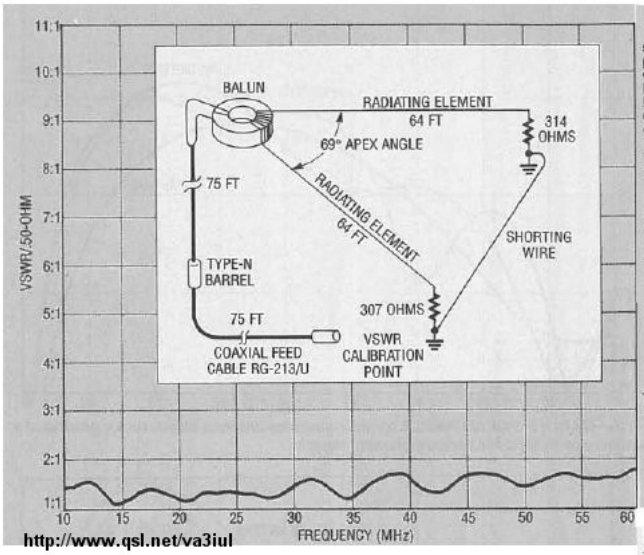

SOURCES OF MATERIALS

The following companies are sources for materials and computer software for this project:

- Toroidal ferrite cores (Part No. FT240-43)—Radio Kit, Inc., P.O. Box 973, Pelham, NH 03076, (603) 635-2235
- Film power resistors—Power Film Systems, Inc., Yellville, AR 72687, (501) 449-4091
- Antenna design software—Phadean Engineering Co., Inc., P.O. Box 611, Shrewsbury, MA 01545, (508) 869-6077
- Phosphor-bronze wire—Astro Industries, Inc., Dayton, OH 43432, (800) 543-5810
- Fiberglass tubing—J. T. Ryerson Co., P. O. Box 1111, Boston, MA 02103. (617) 782-6900

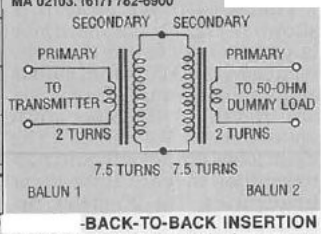

-BACK-TO-BACK INSERTION LOSS TEST of baluns for sloping-vee antenna.

271 - 5/8 Wavelength Antenna

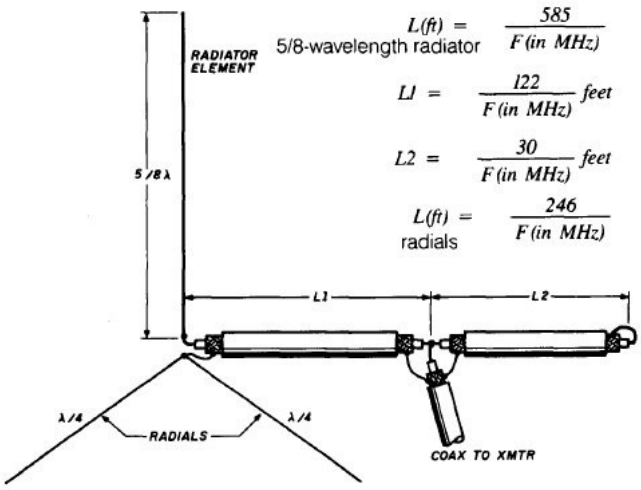

$$L(ft) = \frac{585}{F(in\ MHz)}$$ 5/8-wavelength radiator

$$L1 = \frac{122}{F(in\ MHz)}\ feet$$

$$L2 = \frac{30}{F(in\ MHz)}\ feet$$

$$L(ft) = \frac{246}{F(in\ MHz)}$$ radials

http://www.qsl.net/va3iul

---

272 - C-Pole Vertical Antenna

http://www.qsl.net/va3iul

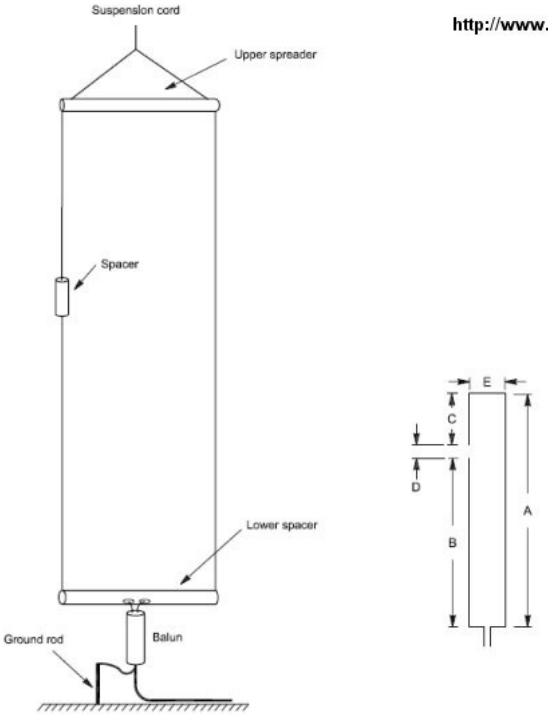

Band (meters)	A (inches)	B (inches)	C (inches)	D (inches)	E (inches)	2:1 SWR bandwidth (kHz)
160	1666	924	994	60	80	58
80	840	460	360	30	40	120
60	591	322	249	20	26	250
40	450	240	190	20	20	260
30	320	167	139	14	14	360
20	177	85	84	8	40	400
15	124	60	60	4	20	600
10	87	46	37	4	20	800

Wire diameter is 1/16-inch. Height of the lower horizontal wire is 12 inches to 24 inches and is non-critical.

---

273 - Bobtail Antenna for 30m

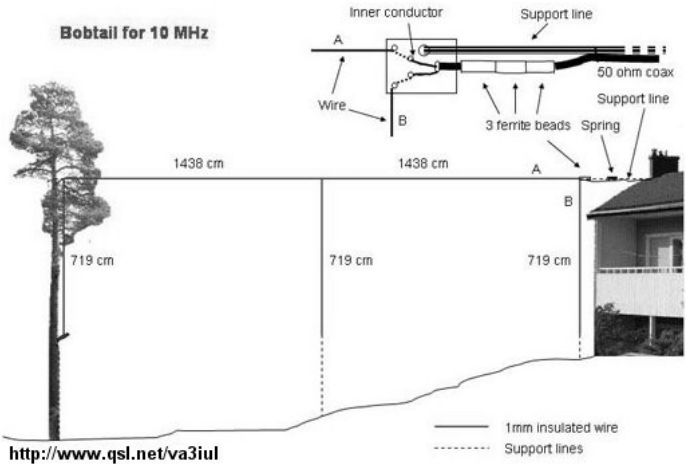

274 - Bobtail Antenna for 40m

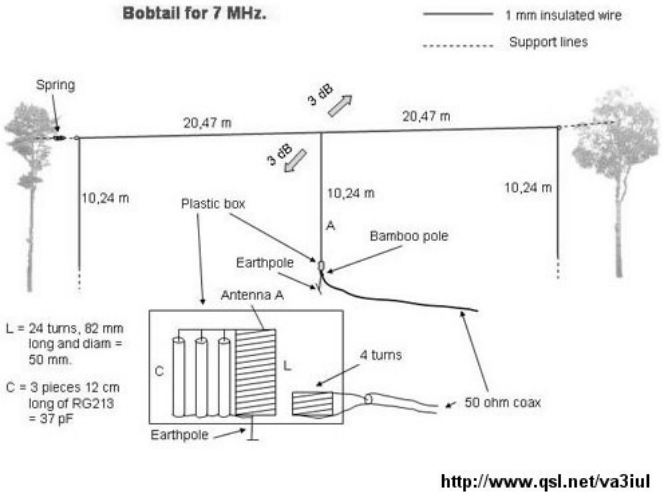

275 - Two Elements Vertical Loop Antenna for 40m

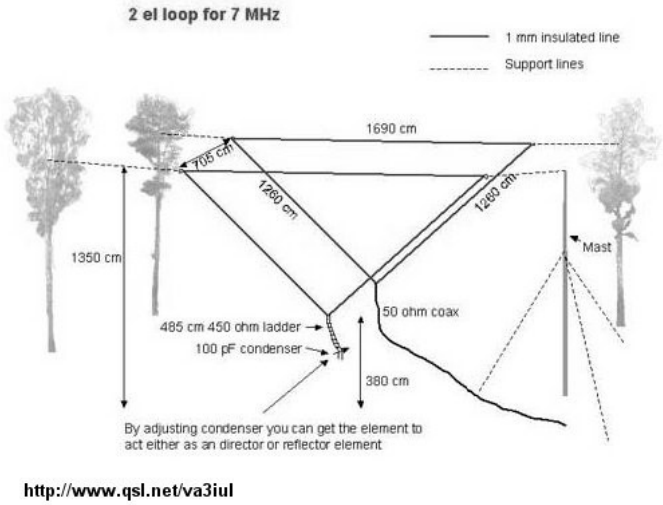

276 - Double Extended Zepp Antenna for 40m

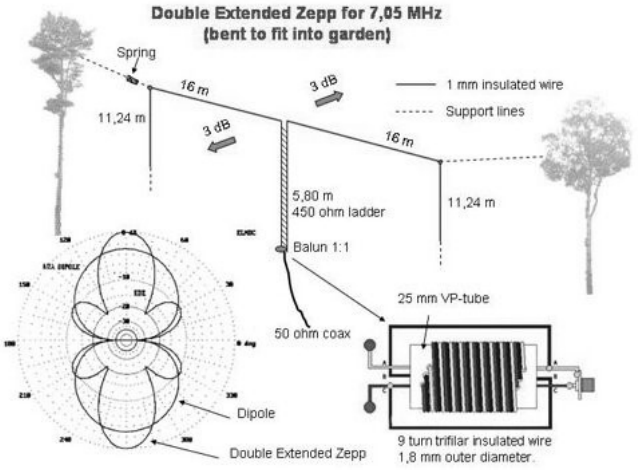

http://www.qsl.net/va3iul

---

277 - Reversible Moxon Flip Beam for 40m

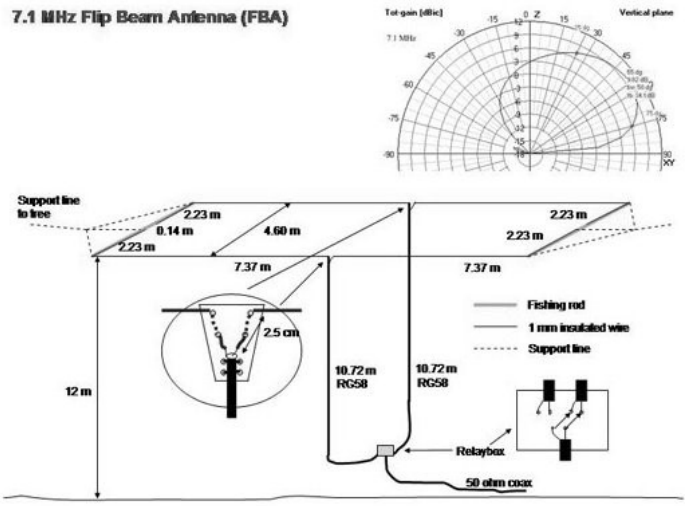

http://www.qsl.net/va3iul

---

278 - Spitwire Antenna for 40m

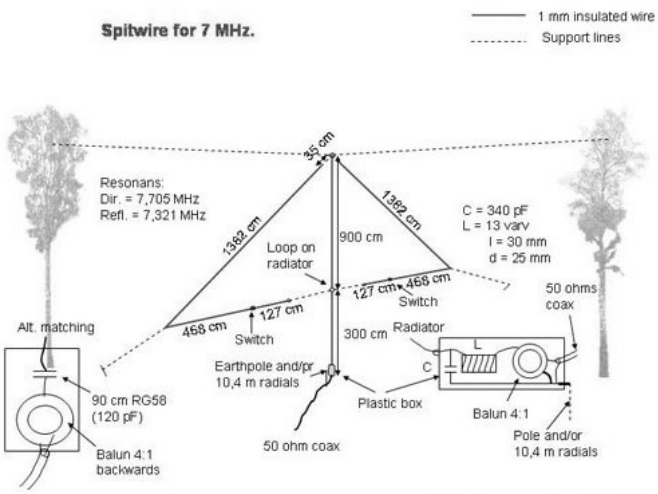

http://www.qsl.net/va3iul

---

279 - Fork Antenna for 40m

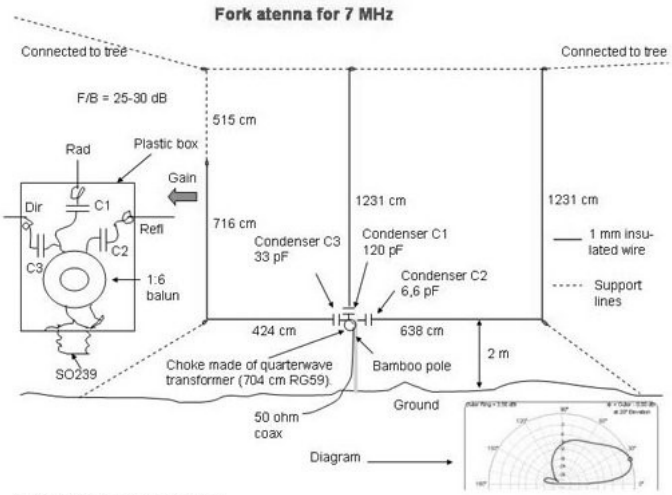

http://www.qsl.net/va3iul

---

280 - Veebeam Antenna 3dB-Gain for All Bands

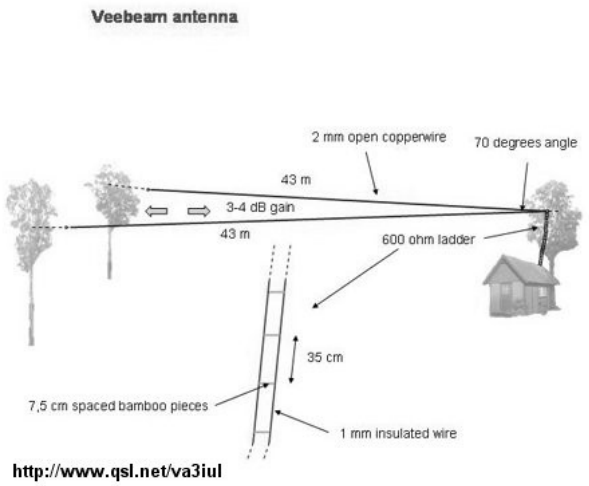

http://www.qsl.net/va3iul

---

281 - Vertical Moxon Antenna for 10m

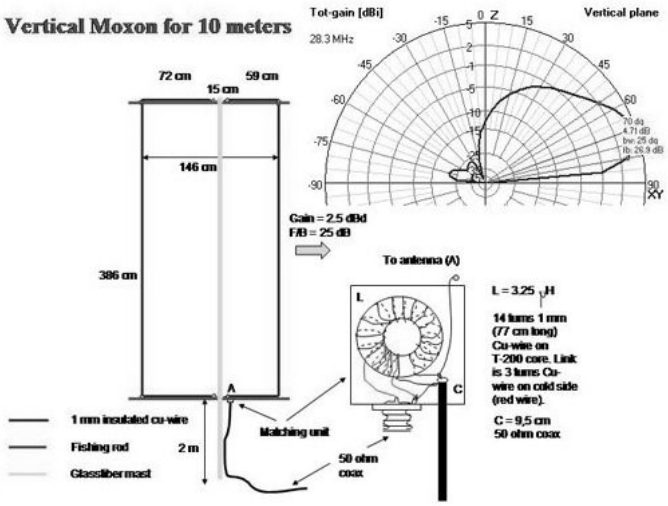

http://www.qsl.net/va3iul

---

282 - Half-Square Antenna for 30m

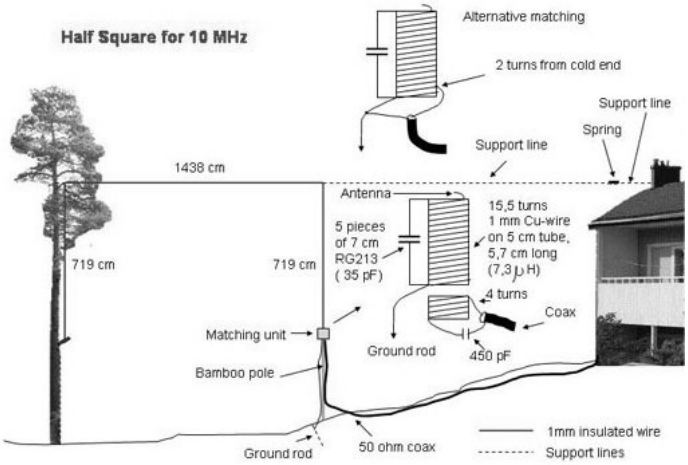

http://www.qsl.net/va3iul

---

283 - Rotatable Vertical Delta Loop for 20m

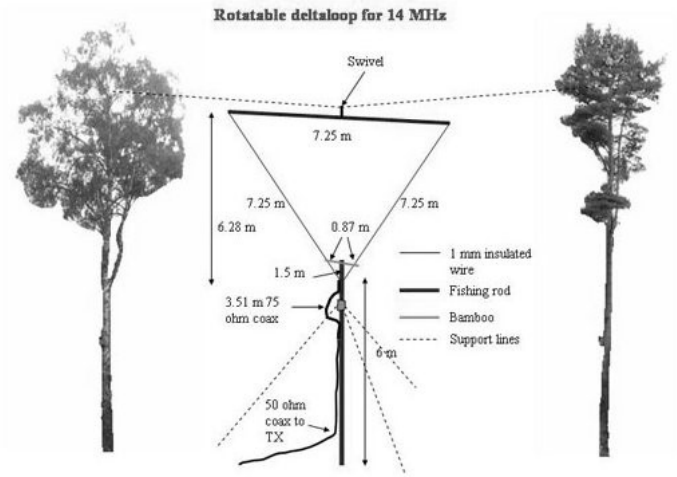

http://www.qsl.net/va3iul

---

284 - Mini-Horse Antenna 10dB-Gain for 40m-to-2m

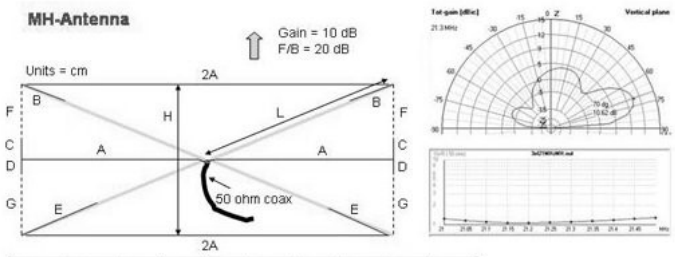

Freq	A	B	C	D	E	F	G	H	L
144	36	12	9	4.5	18	12	16.5	42	41.5
50.1	102.5	33	27	13.5	51	33	46.5	120	119
28.3	182	58	48	24	91	58	82	212	211
24.92	206	65	54	27	102	66	93	240	238
21.2	243	77	64	32	121	77	109	282	281
18.1	285	91	74	37	141	91	128	330	329
14.2	364	116	96	48	181	116	164	424	421
10.1	513	164	136	68	256	164	232	600	594
7.1	728	232	192	96	362	232	328	848	842

1 mm insulated wire
Fishing rod
Support lines

http://www.qsl.net/va3iul

---

285 - Compact Moxon Antenna 5dB-Gain for 40m

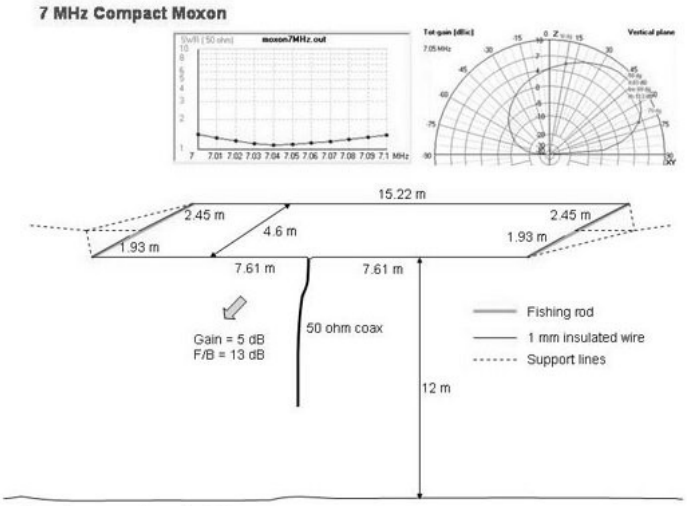

http://www.qsl.net/va3iul

---

286 - Two Elements Sloping Delta Loop 8dB-Gain for 10m

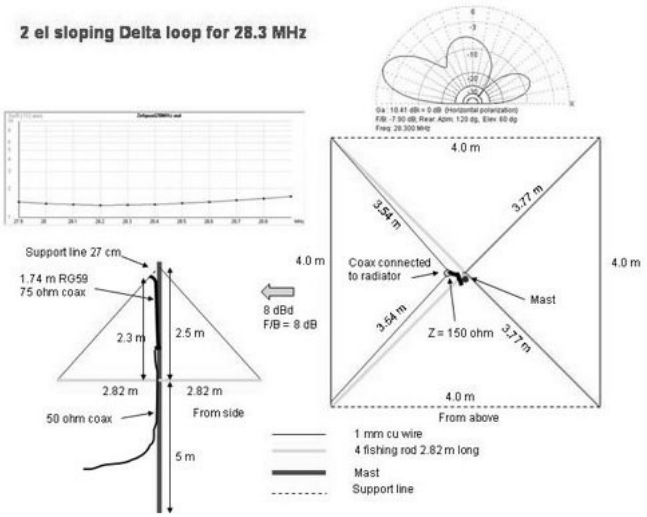

http://www.qsl.net/va3iul

---

287 - Two Elements Phased Vertical Antenna 3dB-Gain for 40m

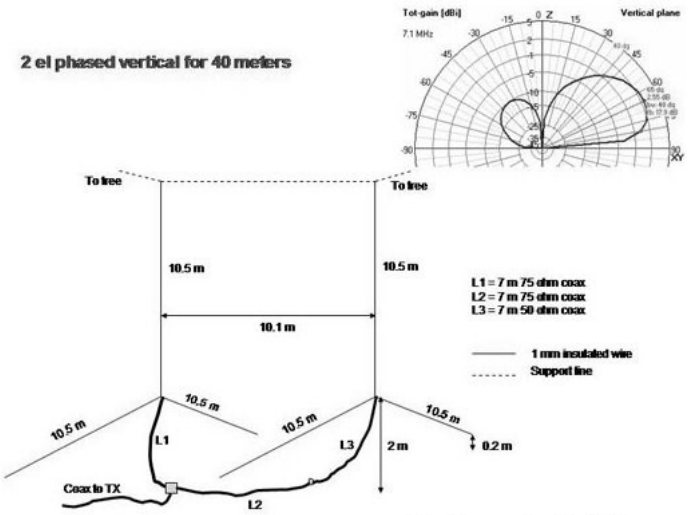

http://www.qsl.net/va3iul

---

288 - Bird Yagi Wire Antenna G4ZU for 10m

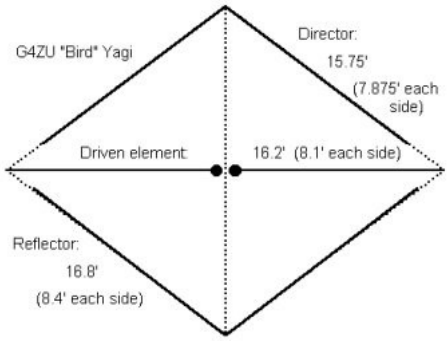

http://www.qsl.net/va3iul

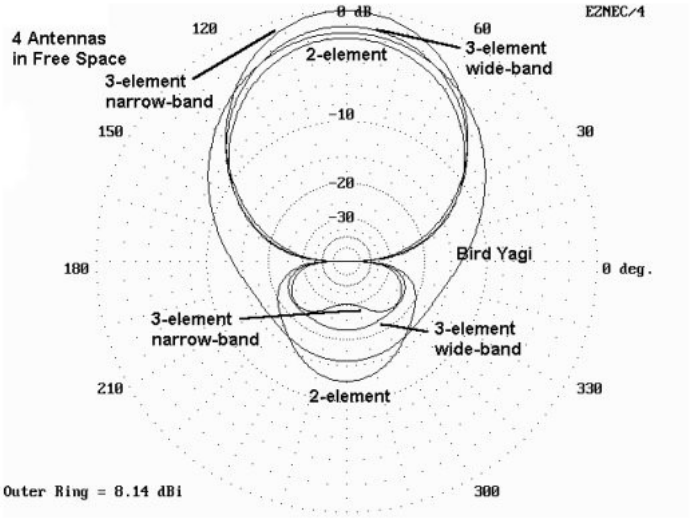

---

289 - Sardine Tin Opener (STO) Antenna for 160m,80m,40m

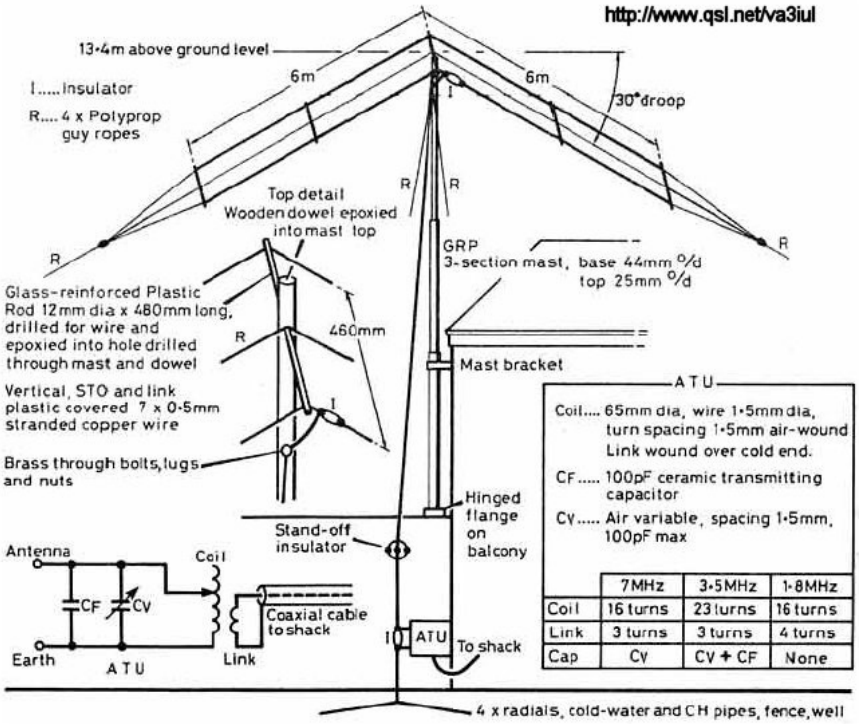

ATU

Coil.... 65mm dia, wire 1·5mm dia, turn spacing 1·5mm air-wound Link wound over cold end.

CF..... 100pF ceramic transmitting capacitor

CV..... Air variable, spacing 1·5mm, 100pF max

	7MHz	3·5MHz	1·8MHz
Coil	16 turns	23 turns	16 turns
Link	3 turns	3 turns	4 turns
Cap	CV	CV + CF	None

---

290 - Vertical Phased Endfire Antenna for 80m

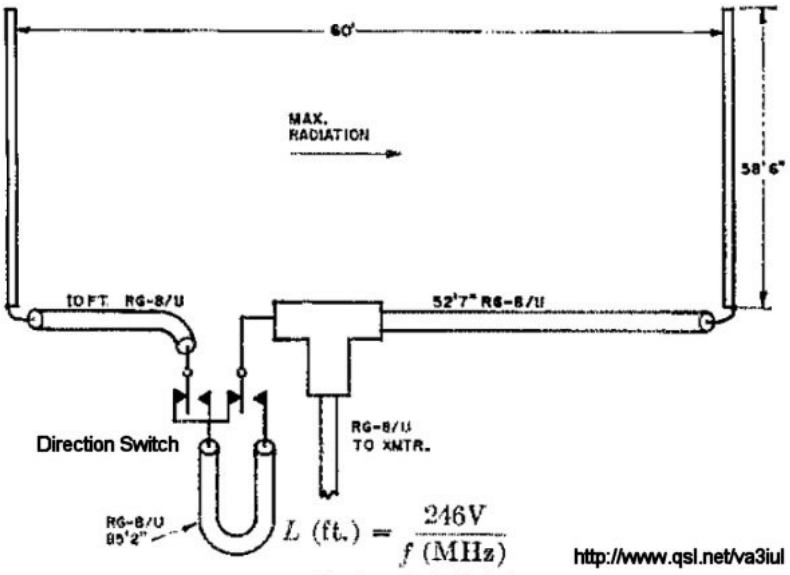

$$L\ (\text{ft.}) = \frac{246V}{f\ (\text{MHz})}$$

(V=coax velocity factor)

http://www.qsl.net/va3iul

291 - Vertical Broadside Array for 80m

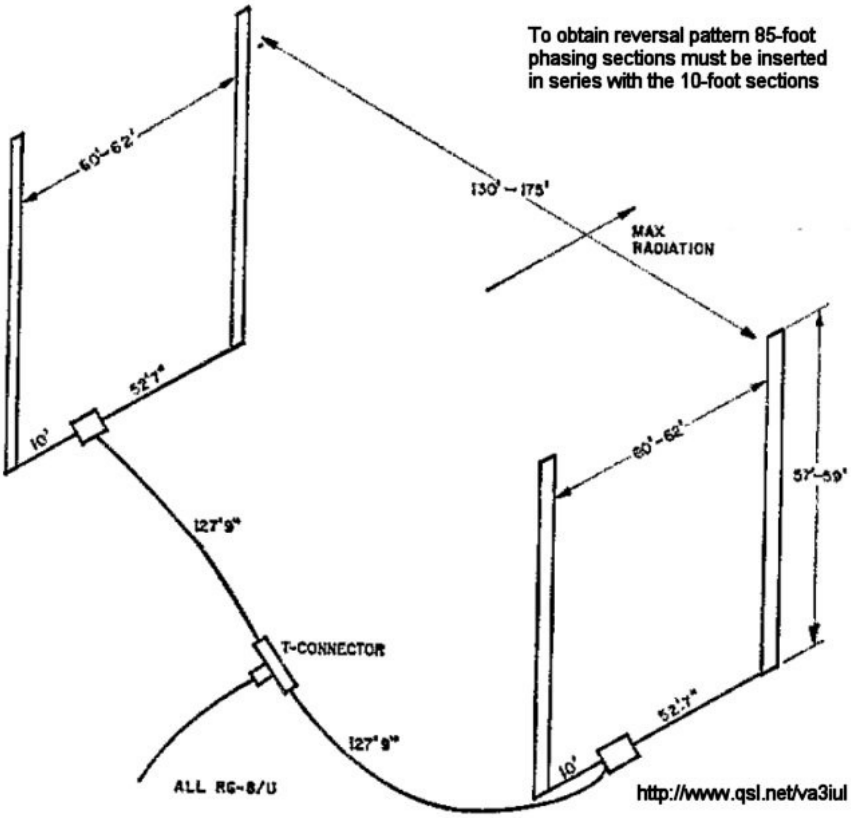

292 - Dual-Band Crossed Dipole Antenna for 40m, 20m

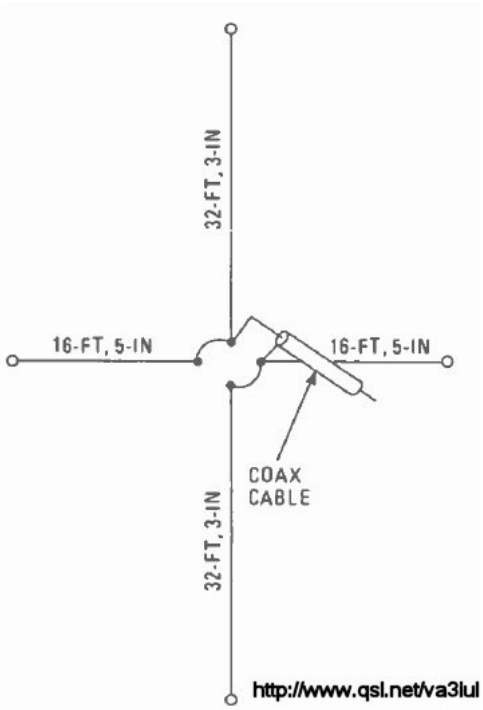

293 - 2 element Vertical Delta Loop Beam for 15m,10m

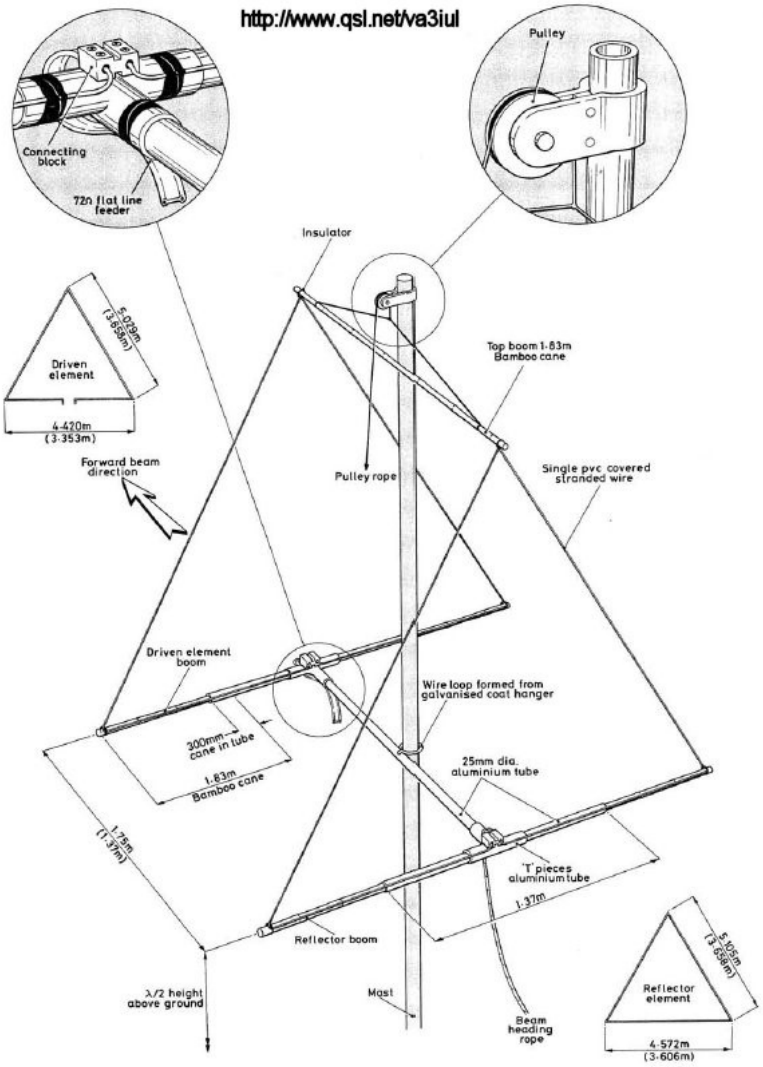

Constructional details. Dimensions in brackets for 10m version

---

294 - Folded Coaxial Dipole Antenna for 80m to 2m

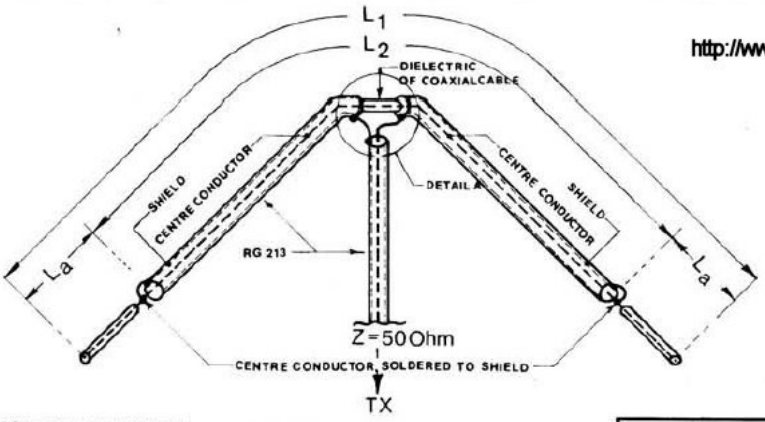

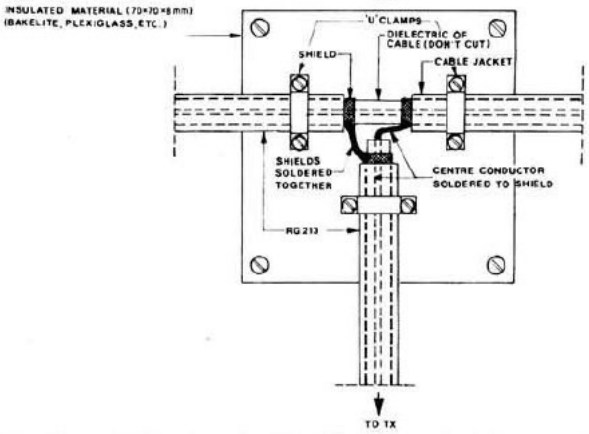

Formulas Used:

$$L_1\,(m) = \frac{140{\cdot}80}{F_{(MHz)}};$$

$$L_2\,(m) = \frac{99{\cdot}40}{F_{(MHz)}};$$

$$L_a\,(m) = \frac{(L_1 - L_2)}{2};$$

For coaxial line with Z = 50 ohms and velocity factor 0·66.

Desired Band m	Centre Frequency MHz	L_1 m	L_2 m	L_a m	Coaxial Line Type
80	3·650	38·58	27·23	5·67	RG-213
40	7·050	19·98	14·10	2·94	
30	10·125	13·91	9·82	2·05	
20	14·170	9·94	7·02	1·46	
16	18·118	7·77	5·49	1·14	
15	21·170	6·66	4·69	0·99	
12	24·940	5·65	3·99	0·83	
10	28·800	4·89	3·46	0·72	
6	51·000	2·77	1·95	0·41	
2	145·000	0·97	0·69	0·14	RG-58/U

295 - VK2ABQ Tribander 4dBd-Gain for 20m,15m,10m

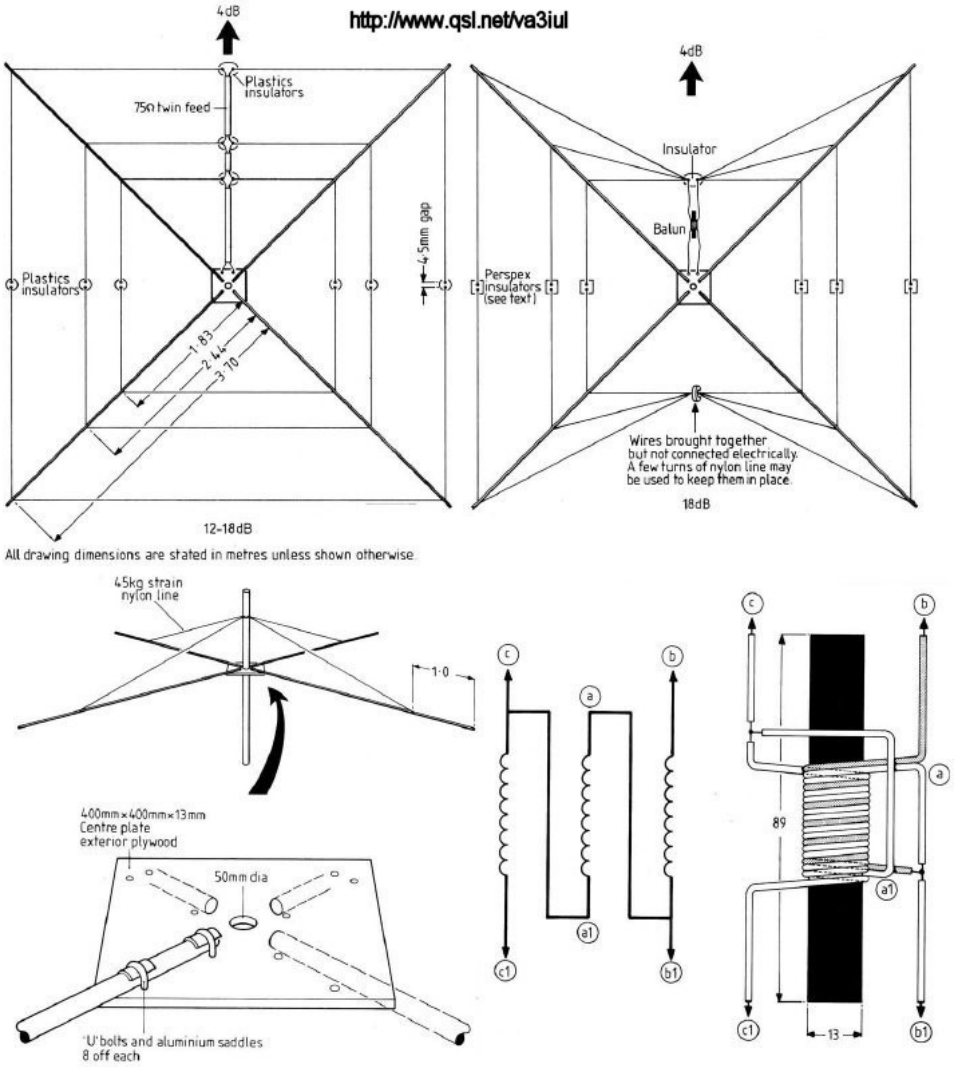

296 - Folded Long-Wire Antenna for 40m

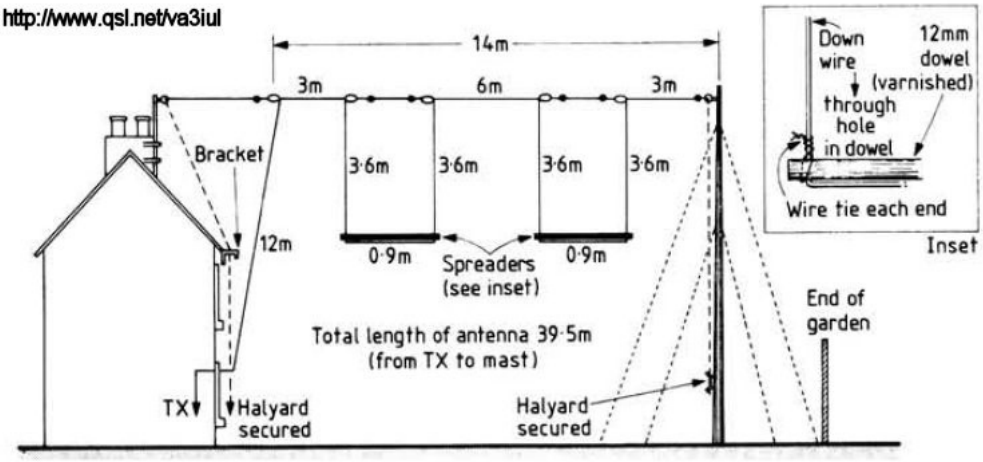

297 - Wine Bottle Vin-Plonk Antenna G2BZQ for 20m

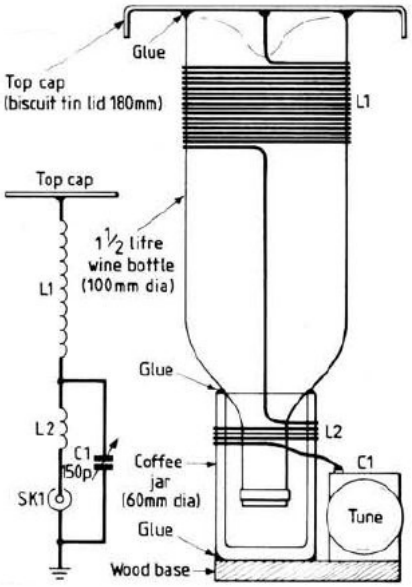

L1–11m of 1 × 0·6 pvc covered wire.
L2 is 3½ turns of 20 s.w.g.tinned copper wire.
The base 25mm thick wood
wine bottle "body" is 100m diameter

http://www.qsl.net/va3iul

---

298 - Guy-Wire Doublet Tri-Band Antenna for 10m,15m,20m

http://www.qsl.net/va3iul

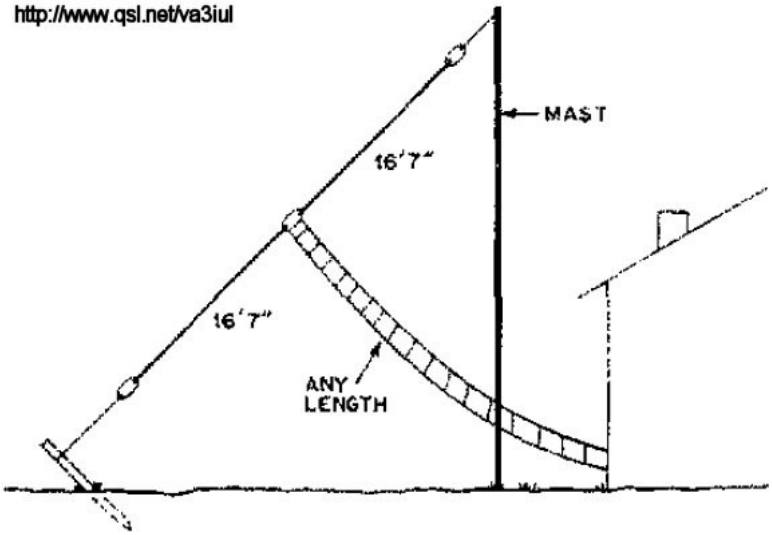

---

299 - Two-Element Vertical Delta Loop Beam Gain-4dB

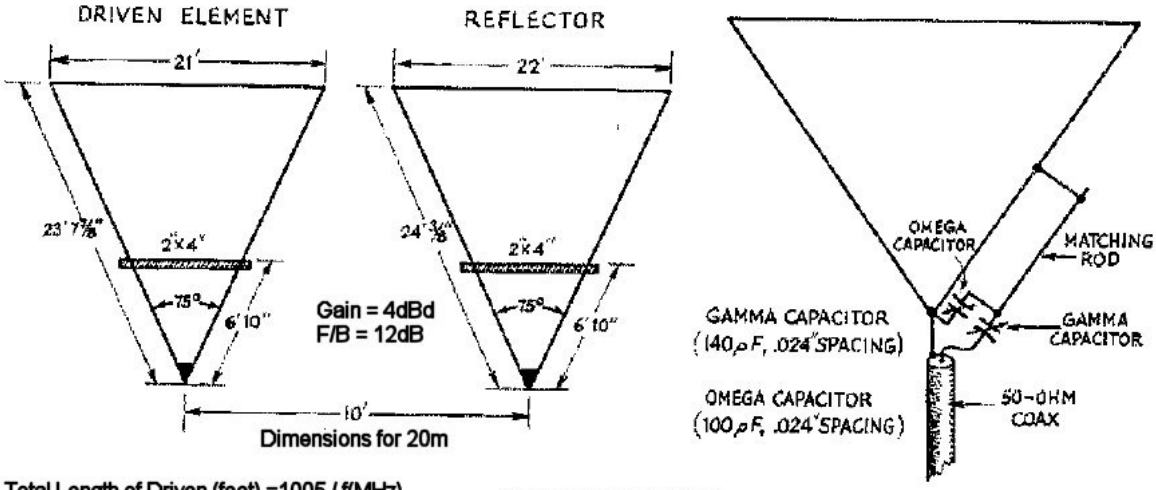

Total Length of Driven (feet) =1005 / f(MHz)
Total Length of Reflector (feet) = 1030 / f(MHz)

http://www.qsl.net/va3iul

Matching-section details.

---

300 - Novi-Loop Antenna

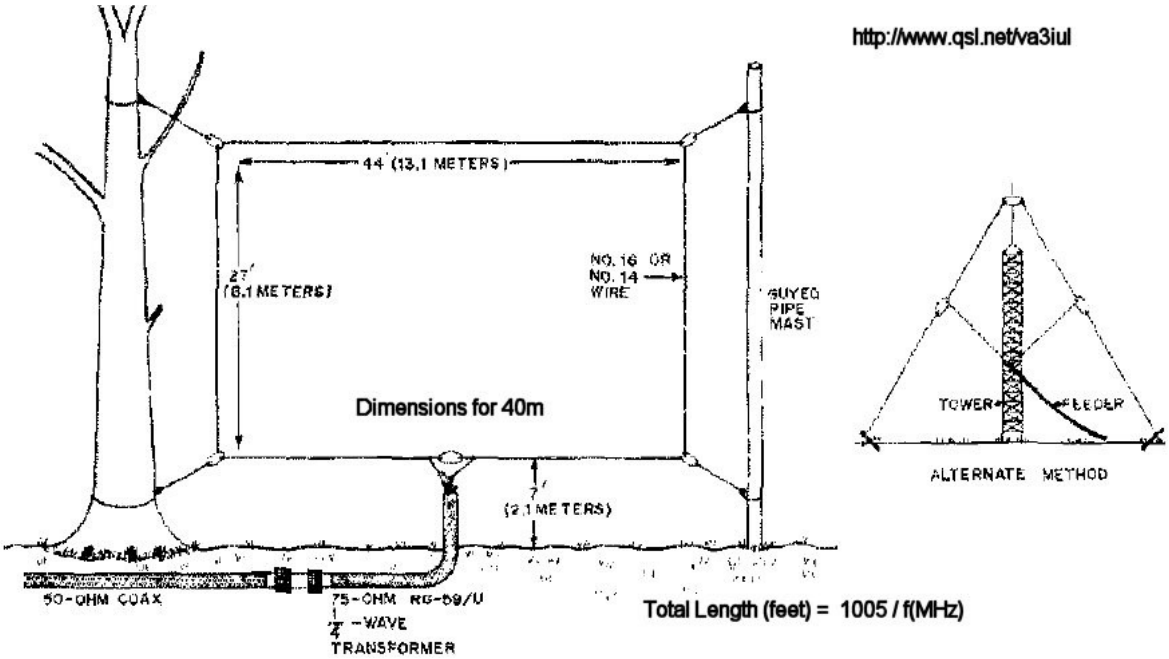

http://www.qsl.net/va3iul

Total Length (feet) = 1005 / f(MHz)

---

301 - K3BM Sloping Delta Loop Antenna for 160m

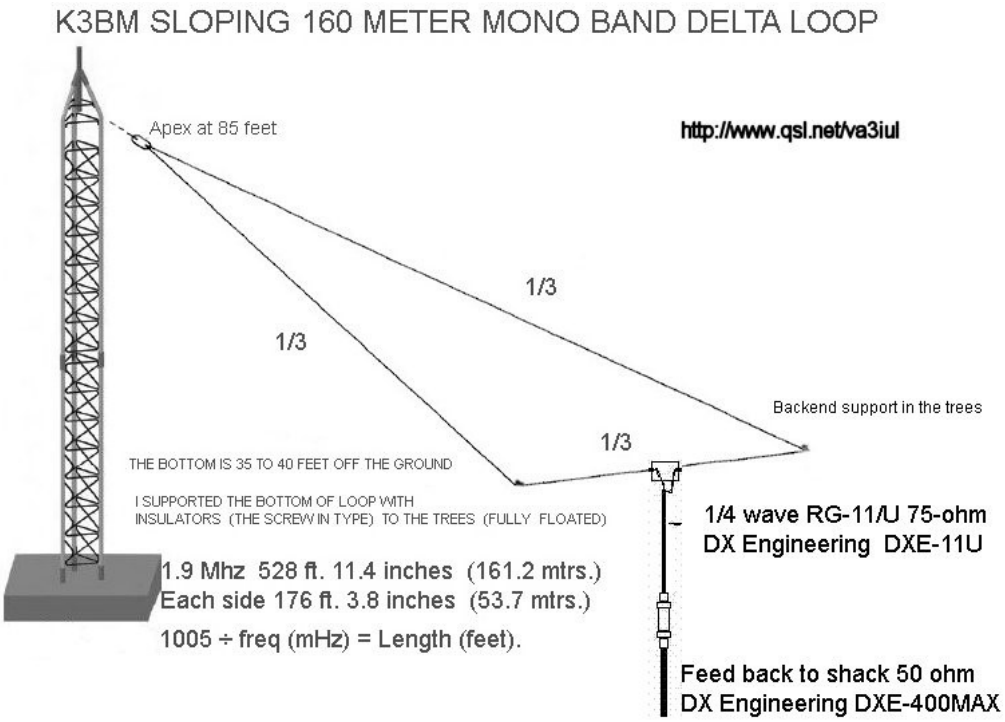

---

302 - Vertical Delta Loop GW7AAV for 4m

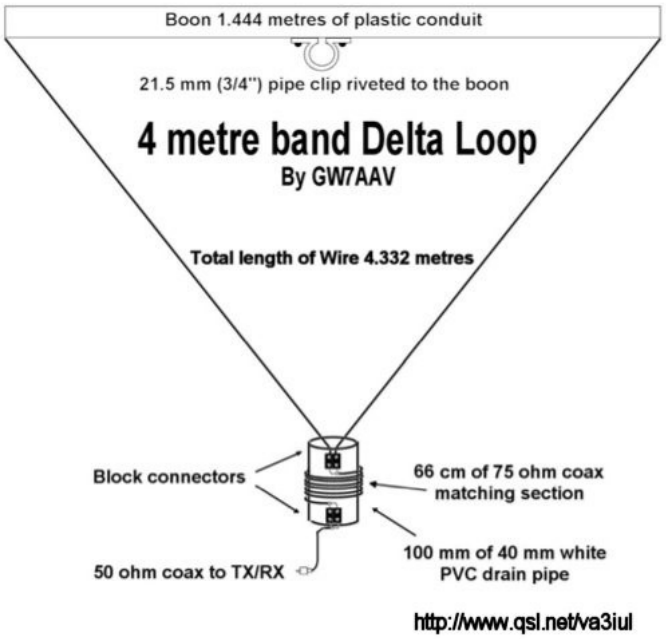

---

303 - Delta Mono-Loop Antenna DJ0IP for 40m

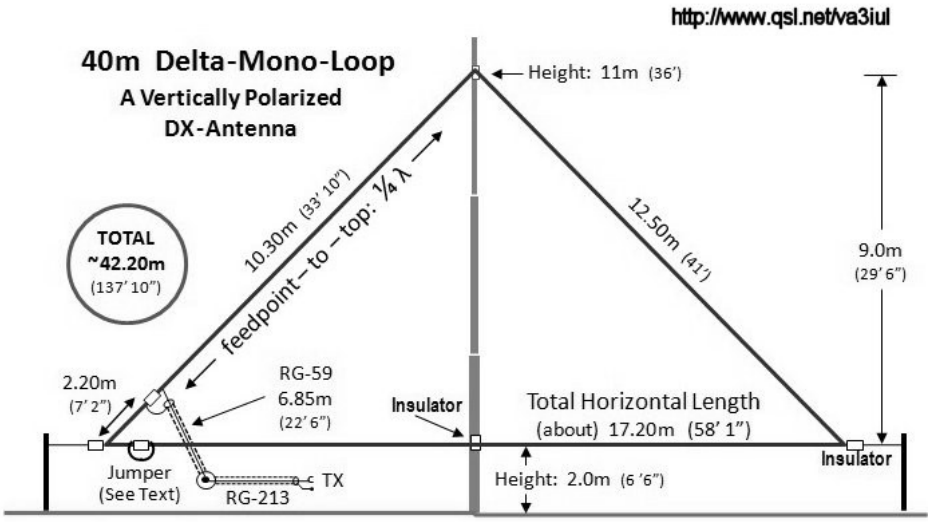

304 - Multiband Vertical Delta Loop M0PLK for 30m to 10m

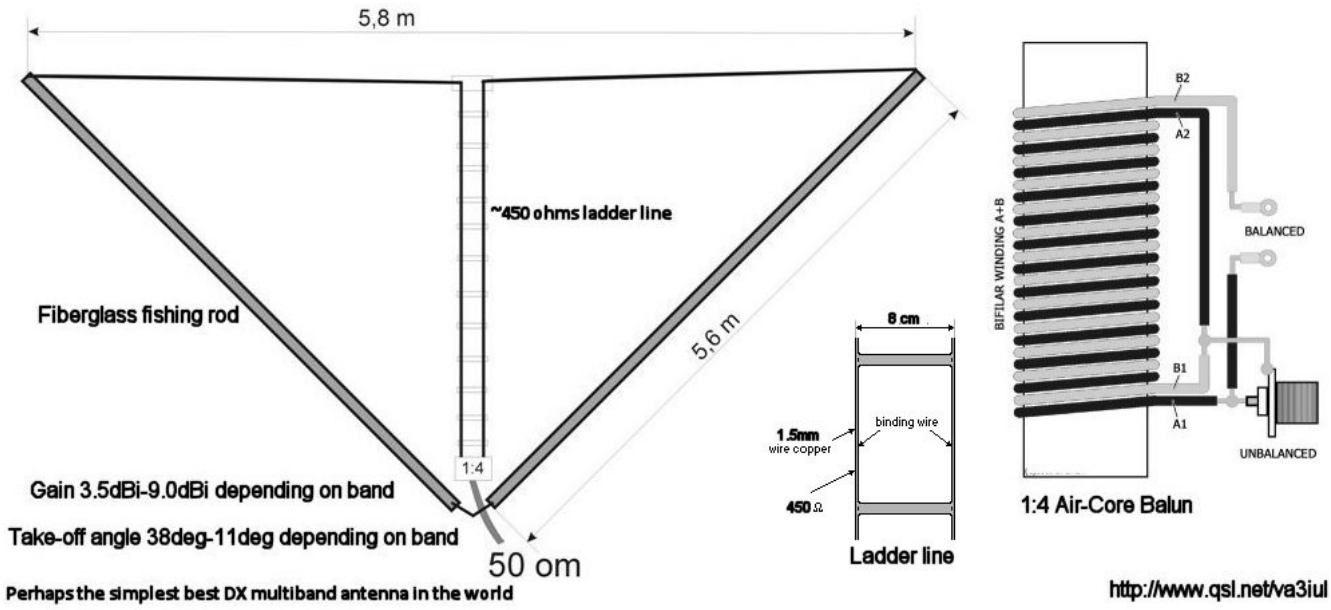

305 - Inverted Dipole Delta Loop Antenna for 40m,80m,160m

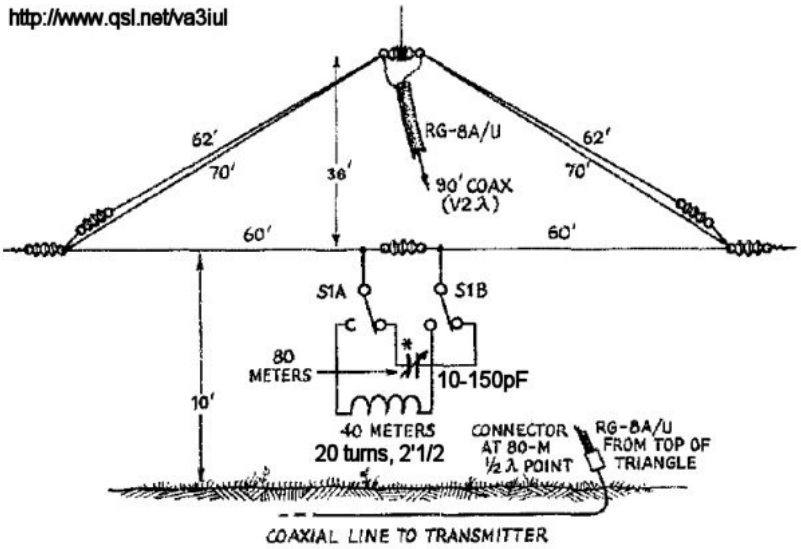

Suitable dimensions and switching arrangement for the three-band antenna. S1 is a dpdt knife switch. The switch is left in the open position for 160-meter operation.

306 - Two Element Wire Beam OK1ATP for 160m

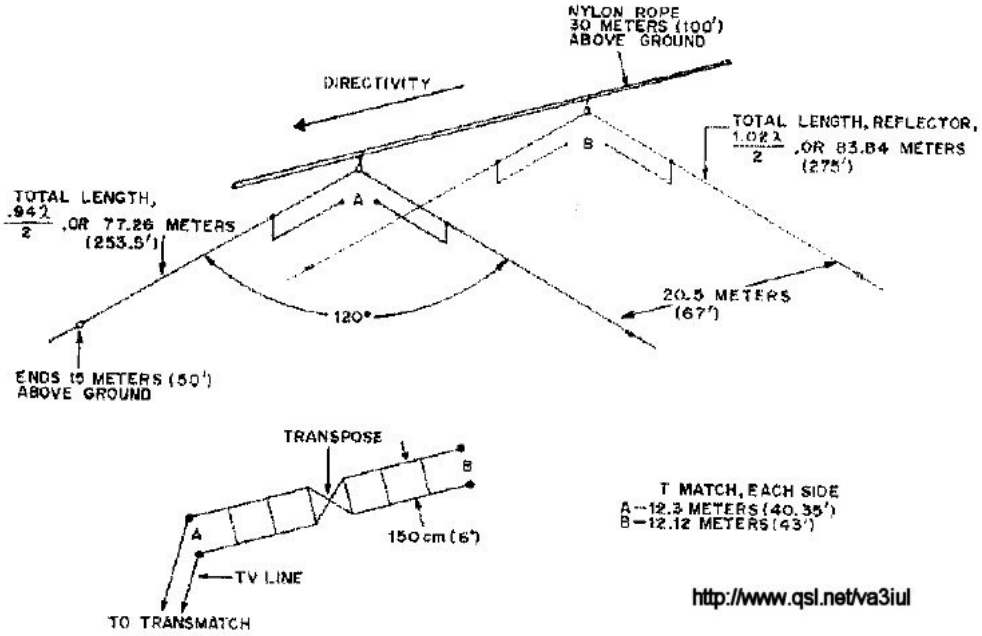

307 - Quad Fixed Beam Antenna for 20m

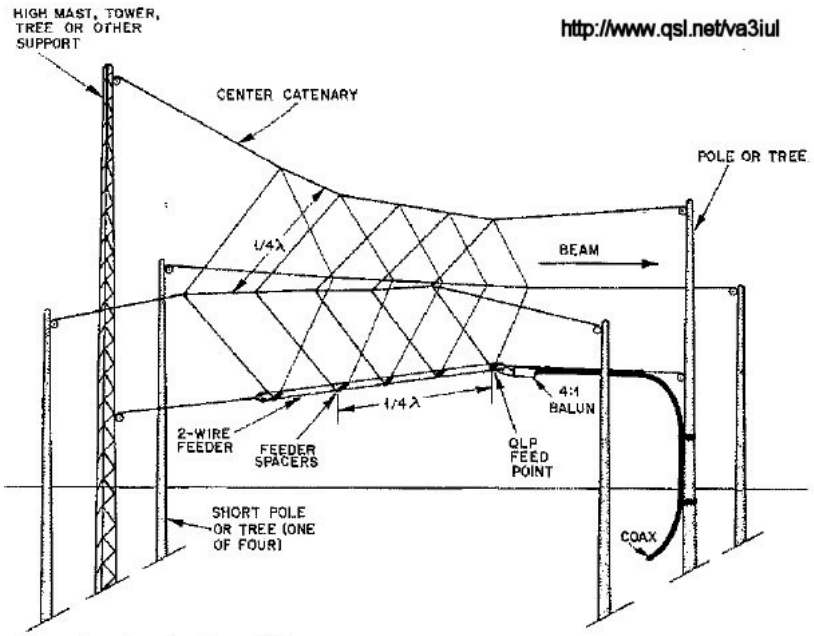

Dimensions for the 20-m QLP

QUAD ELEM. NO.	*SIDE LENGTH*	*TOTAL ELEM. LENGTH*
1	20' (6.10 m)	80' (24.38 m)
2	18' (5.49 m)	72' (21.95 m)
3	16.25' (4.95 m)	65' (19.81 m)
4	14.75' (4.50 m)	59' (17.98 m)
5	13.5' (4.11 m)	54' (16.46 m)
S-NO.	*S-LENGTH*	
1	7.4' (2.26 m)*	
2	6.7' (2.04 m)*	
3	6.0' (1.83 m)*	
4	4.8' (1.46 m)*	

308 - Open Loop RX Antenna for 160m

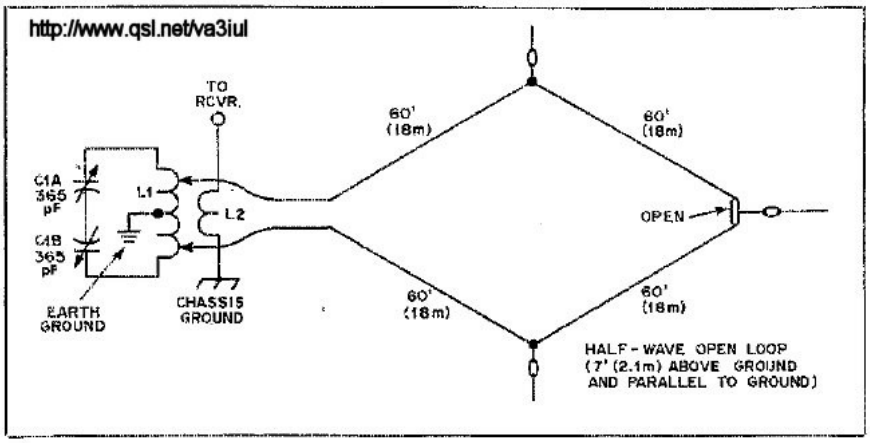

A half-wavelength open-loop receiving antenna for 160 meters. The antenna is parallel to the earth and spaced seven feet above it. C1 is a two-section broadcast-radio variable capacitor. L1 should have an inductance of 50 μH. The feeders are tapped on L1 to obtain an SWR of 1. An earth ground is connected to the center of L1, but L2 is returned to chassis ground

---

309 - Hybrid Multiband Antenna for 160m to 10m

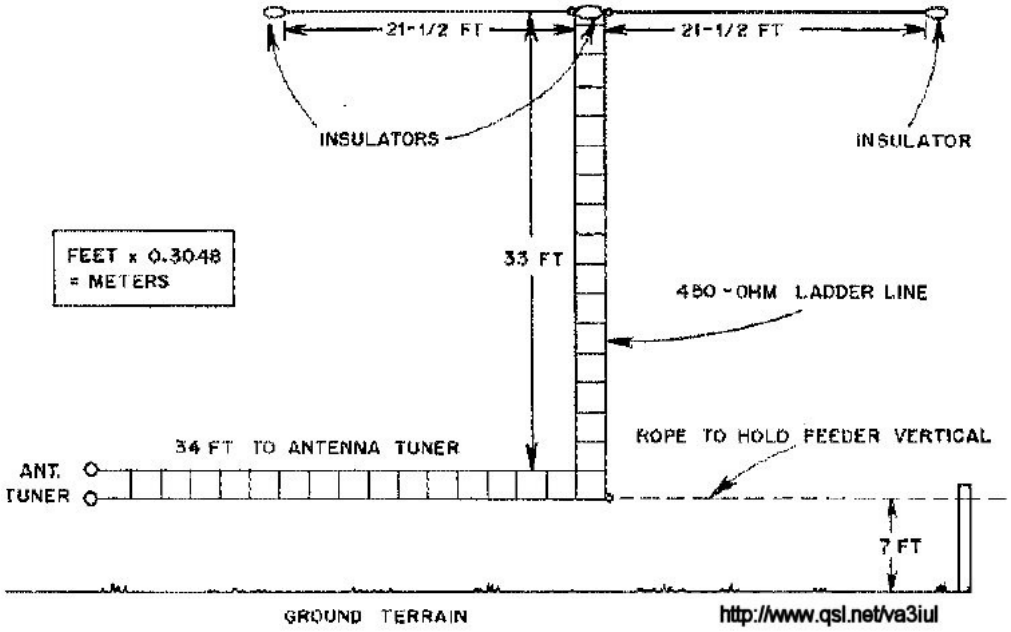

---

310 - Long Wire Antenna GW0GHF for 6m

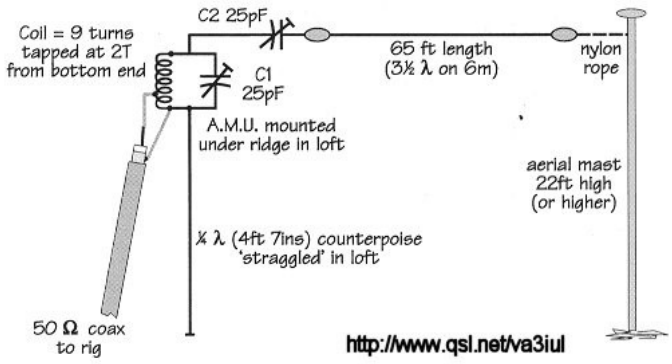

---

311 - Random Delta Loop KC8AON for 80m to 10m

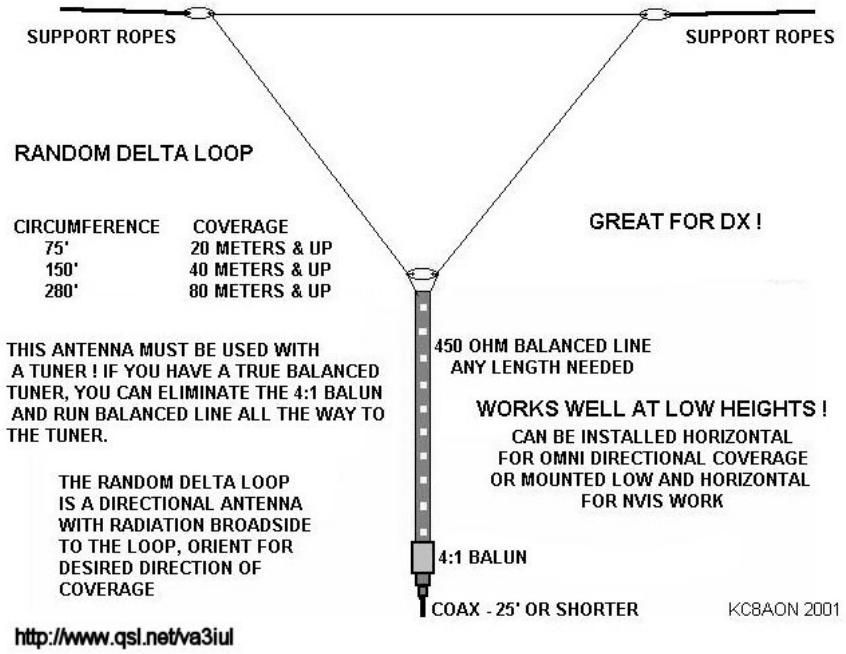

312 - Broadband Butterfly Terminated Dipole KQ6XA 80m-10m

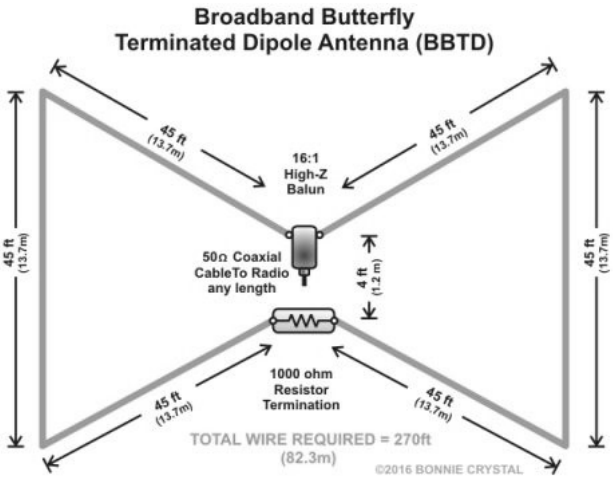

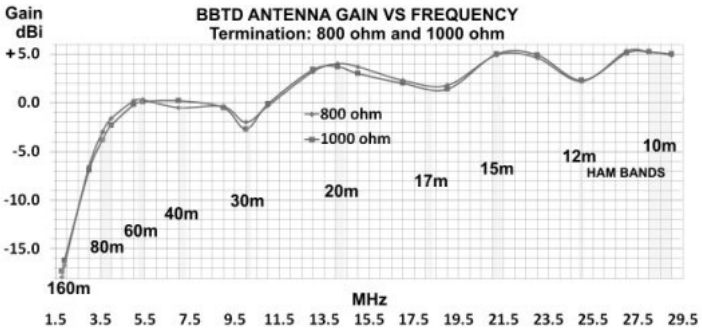

http://www.qsl.net/va3iul

313 - Crossed Dipole Antenna for 23cm

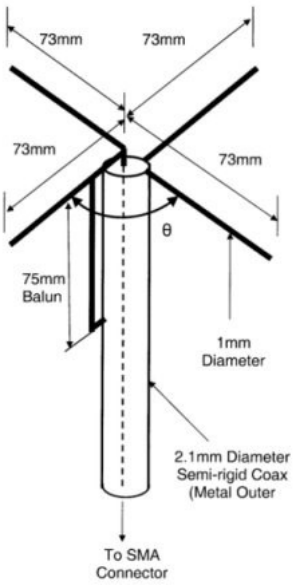

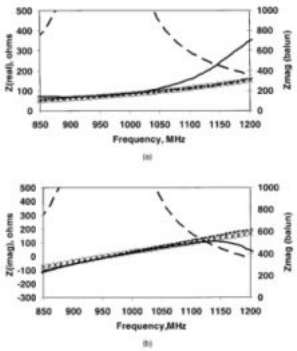

http://www.qsl.net/va3iul

314 - The Ultimate Eight Bander Antenna

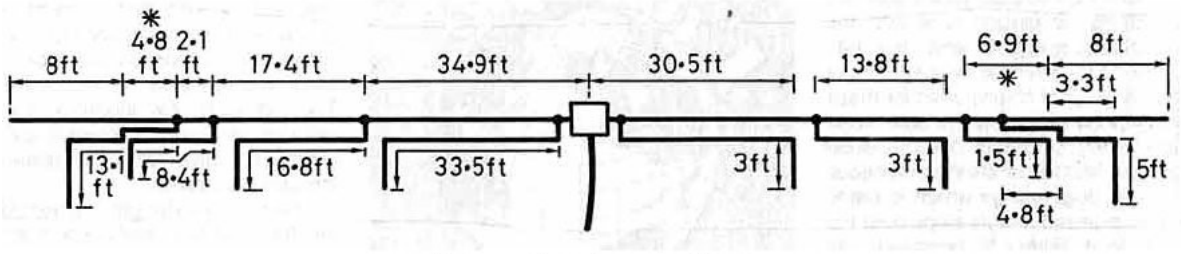

Freq. MHz	λ	Length ft.	Notes	
3.6	1/2	131.2	A	
18.1	5/2	134.8	A	
10.1	3/2	134.9	B	Corrected length for end insulators
24.9	7/2	133.8	B	Corrected length for end insulators
28.3	7/2	121.0	C	
14.1	3/2	103.3	D	
7.05	1/2	67.0	E	
21.1	3/2	69.0	E	

http://www.qsl.net/va3iul

---

315 - Simple DX Wire Antenna LA5UF

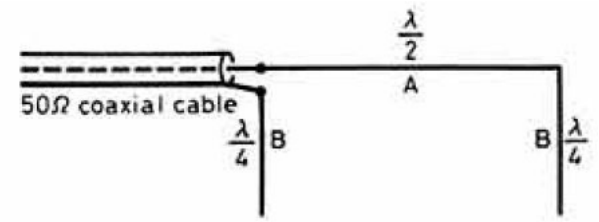

A = 75/f (MHz) in metres,
B = 150/f (MHz) in metres,

http://www.qsl.net/va3iul

---

316 - Elongated Quad-Loop Antenna G3BDQ

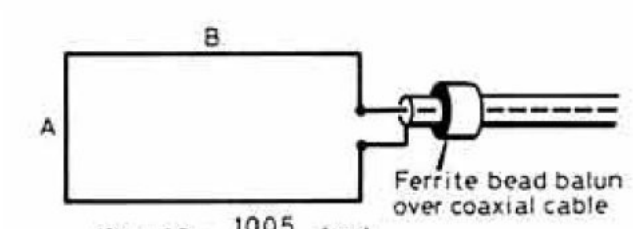

$$2A + 2B = \frac{1005}{f(\text{MHz})} \text{ feet}$$

$$A = \frac{1993}{f(\text{MHz})} \text{ inches} \qquad B = \frac{4028}{f(\text{MHz})} \text{ inches}$$

http://www.qsl.net/va3iul

---

317 - Bobtail-Curtain Antenna for 20m,40m

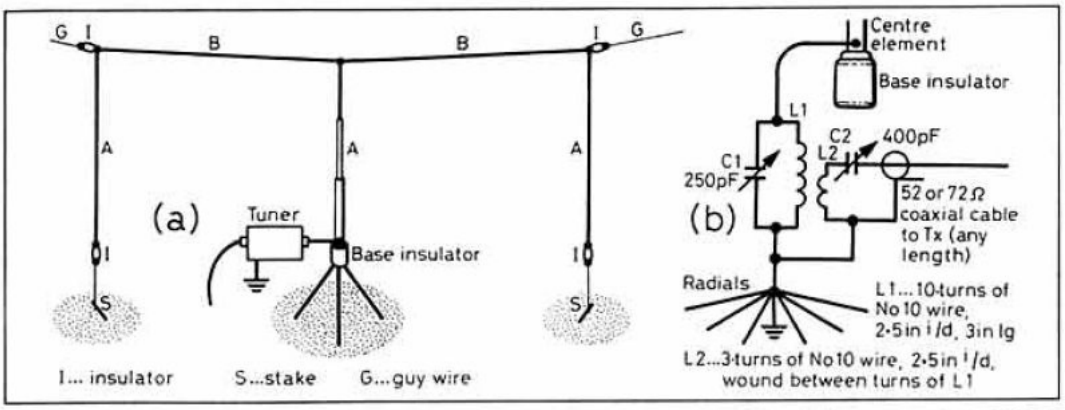

(a) The Bobtail-curtain antenna as described in many Handbooks. This design comes from VE1TG (*Ham Radio*, July 1969) as reproduced in *ART7*. Dimensions for 14MHz A 16.5ft, B 33ft (7MHz A 33ft, B 66ft). (b) Tuner used by VE1TG on 7MHz. For 14MHz L1 and C1 about half the values shown, C2 about the same.

http://www.qsl.net/va3iul

---

318 - Vertical Tee Antenna

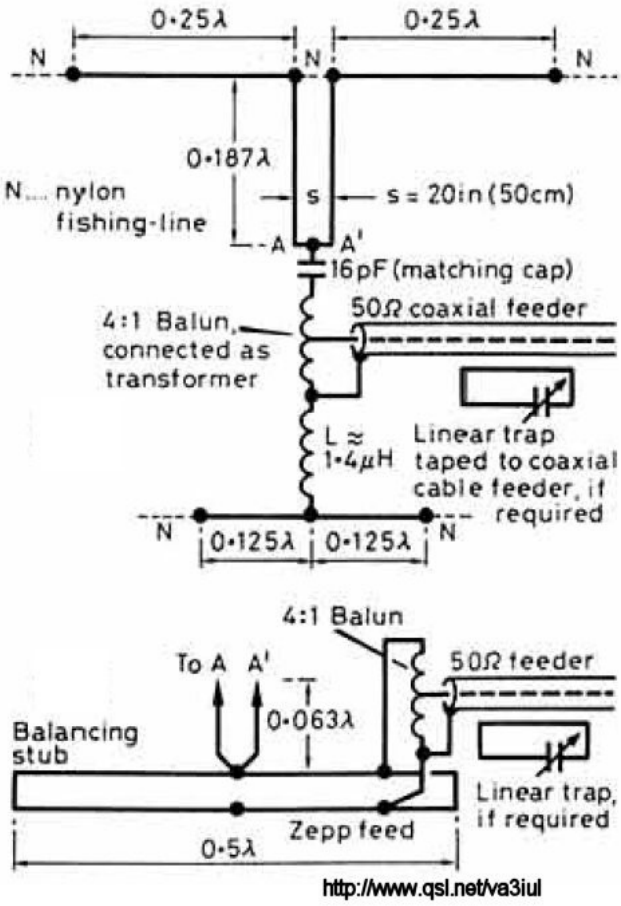

http://www.qsl.net/va3iul

---

319 - Three Versions of Wide Band Dipoles

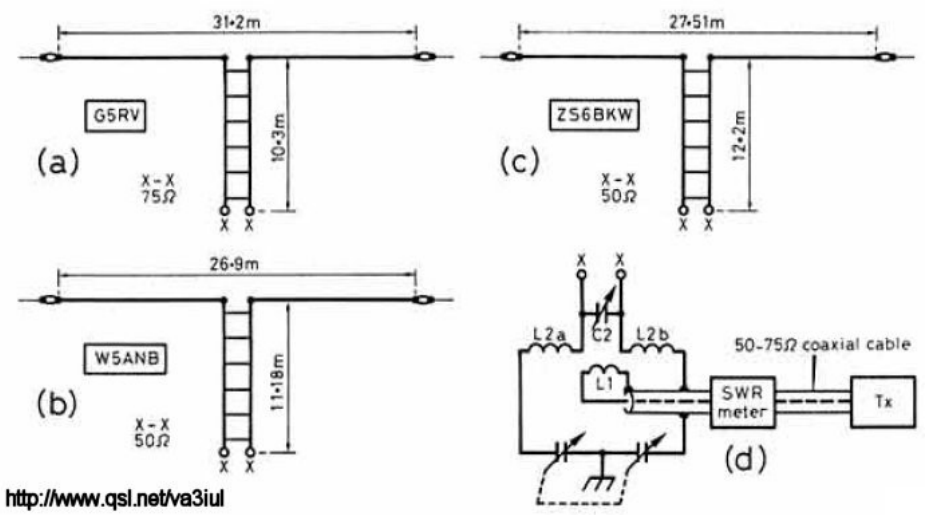

320 - All HF Bands Loop Antenna GI2FHN

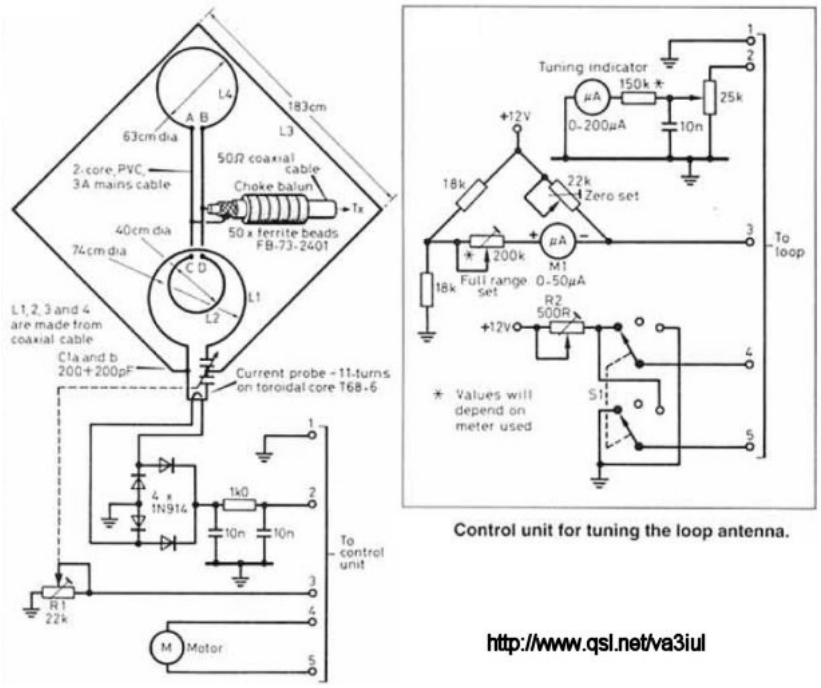

321 - Triangle Sloper 3dB-Gain G8PO for 160m,80m,40m

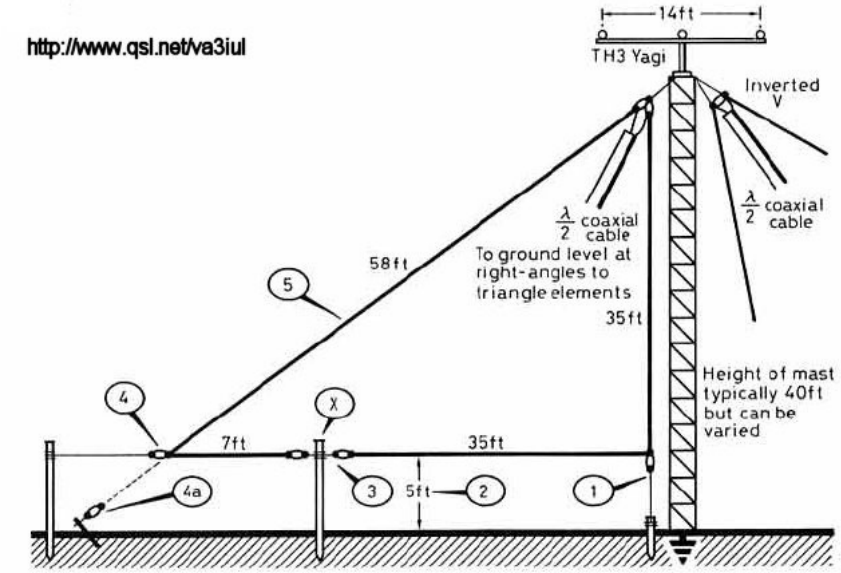

322 - Quad Window Antenna for 2m

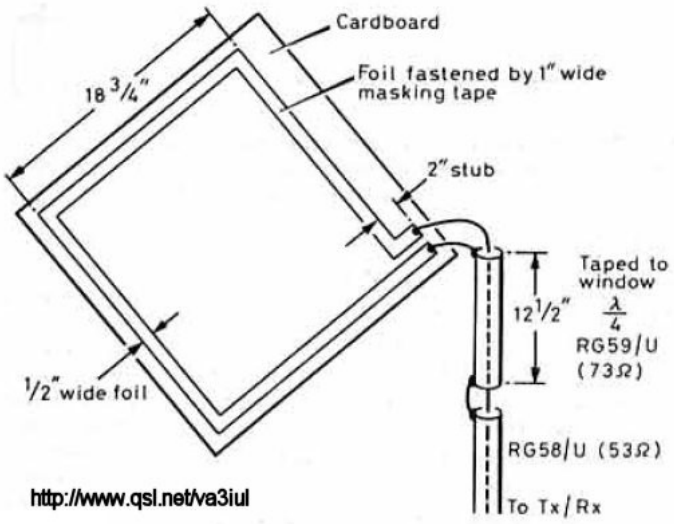

---

323 - Hamtenna VK6VH for 80m

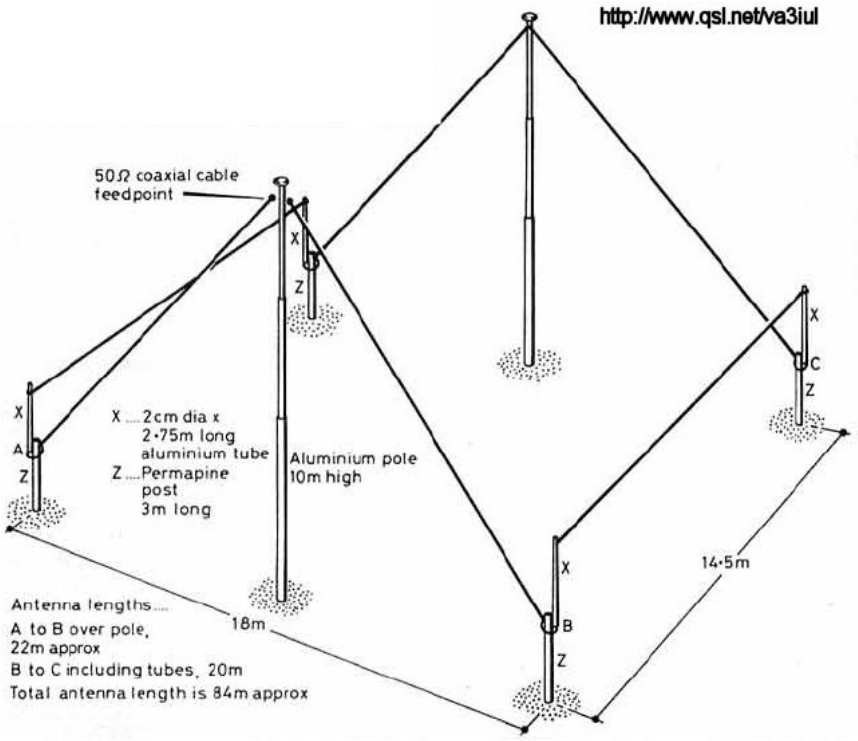

---

324 - Monopole Antenna Loaded with Folded Dipole for 23cm

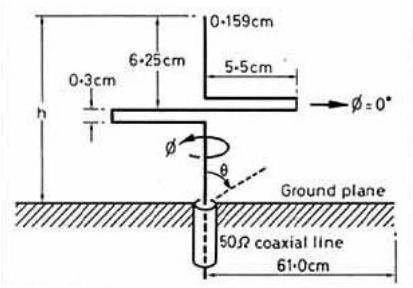

http://www.qsl.net/va3iul

---

325 - Lazy-H Antenna for 20m,17m,15m,12,10m

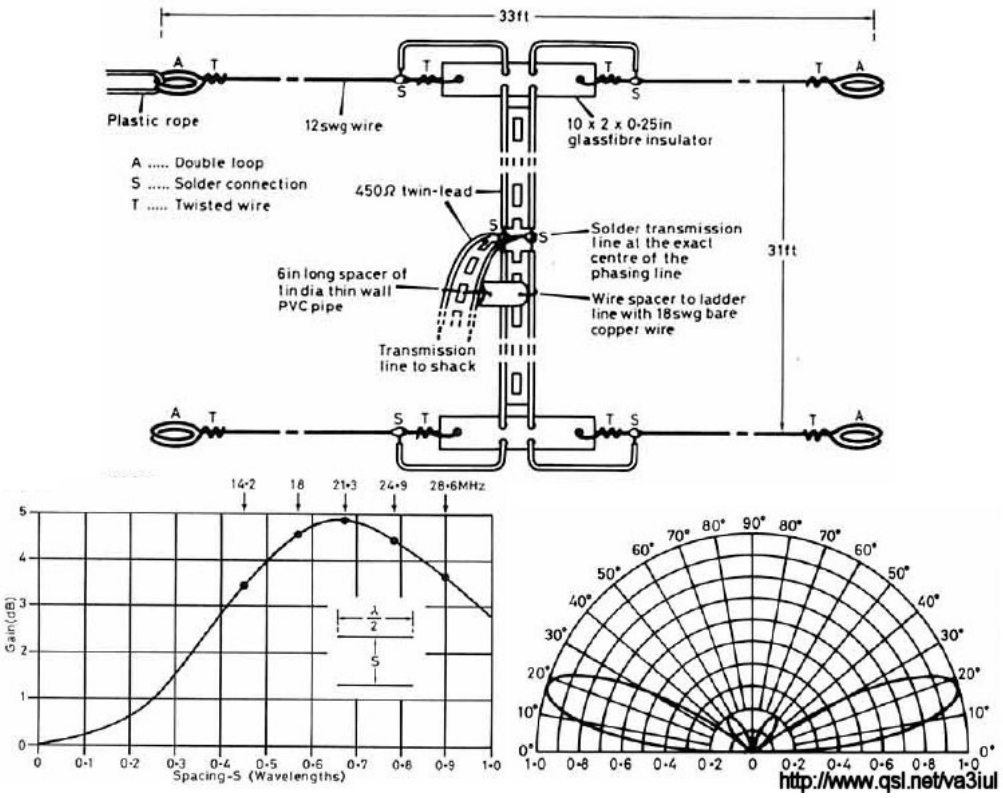

326 - Multee Antenna for 160m,80m,40m

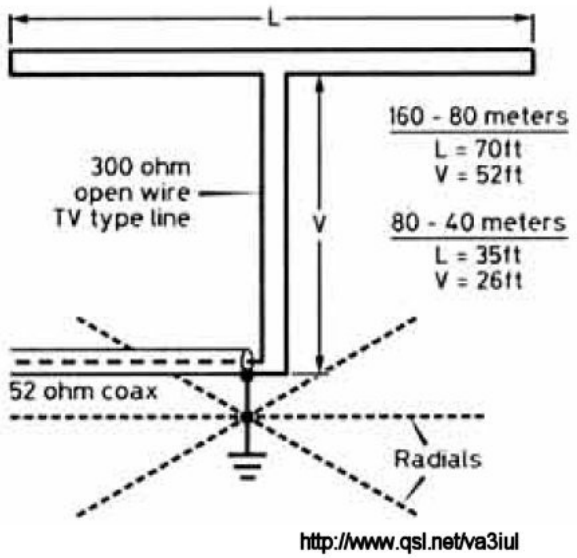

327 - Marconi Ribbon Line Antenna for 80m

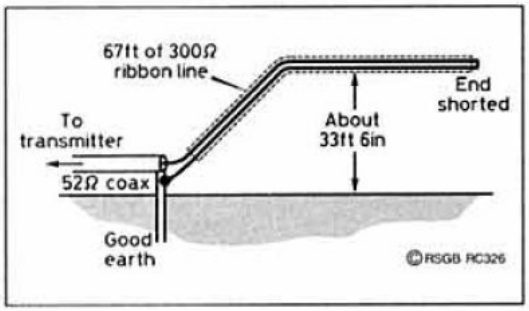

λ/4 ground Marconi antenna for 3.5MHz using 57ft of 300- or 450-ohm ribbon line. A good earth system (preferably including radials or elevated counterpoise) is needed for good performance.

http://www.qsl.net/va3iul

---

328 - WARC Tri-Band Antenna for 30m,17m,12m

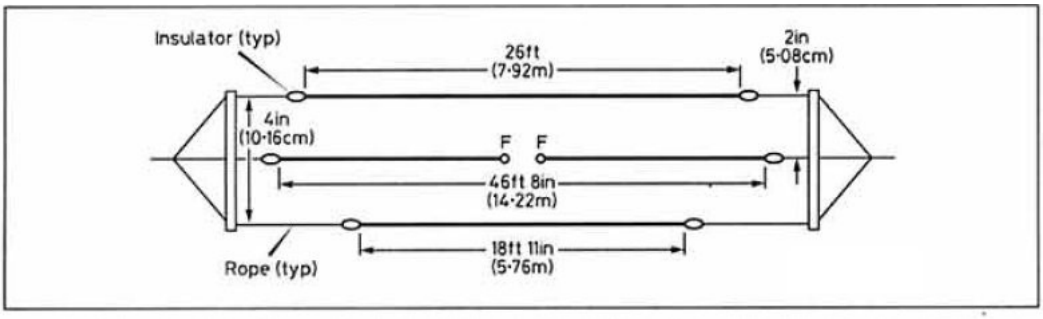

K9AY's experimental tri-band antenna for the 10, 18 and 24MHz band using the close-coupled (open-sleeve) approach. Dimensions are for an antenna made from No 12 AWG wire at a height of 45ft. Insulated spacers are required to keep the wires in alignment. Extra closely coupled wires could be added radially around the driven element for 14 and 21MHz but there will be a practical limit to the number of bands due to the growing complexity of interactions and structure.

http://www.qsl.net/va3iul

---

329 - Two-Element Delta Loop Beam for 20m,10m

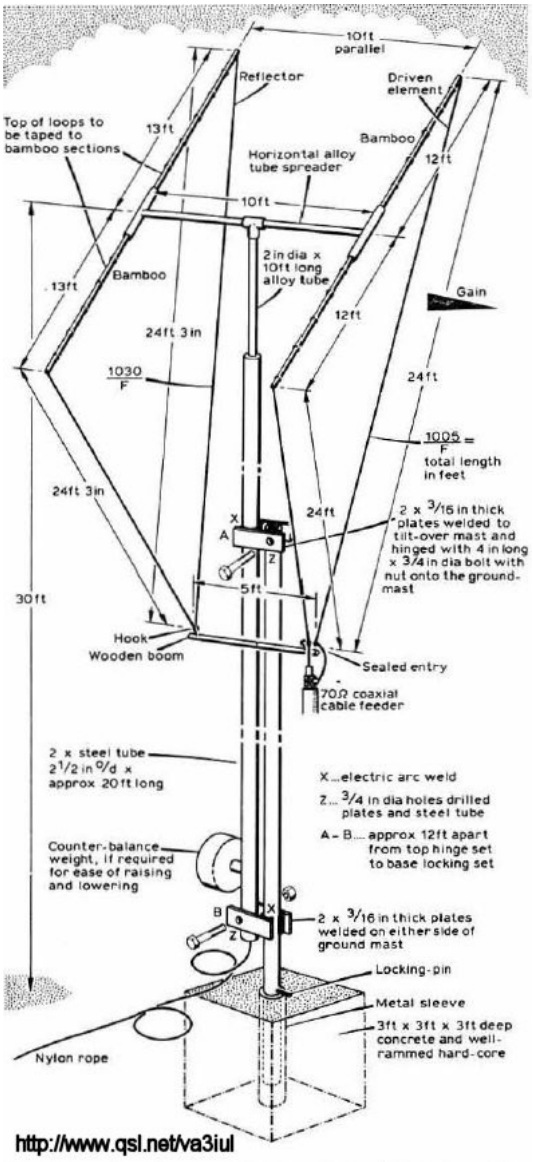

330 - Bidirectional Array Antenna W8JK for 20m to 10m

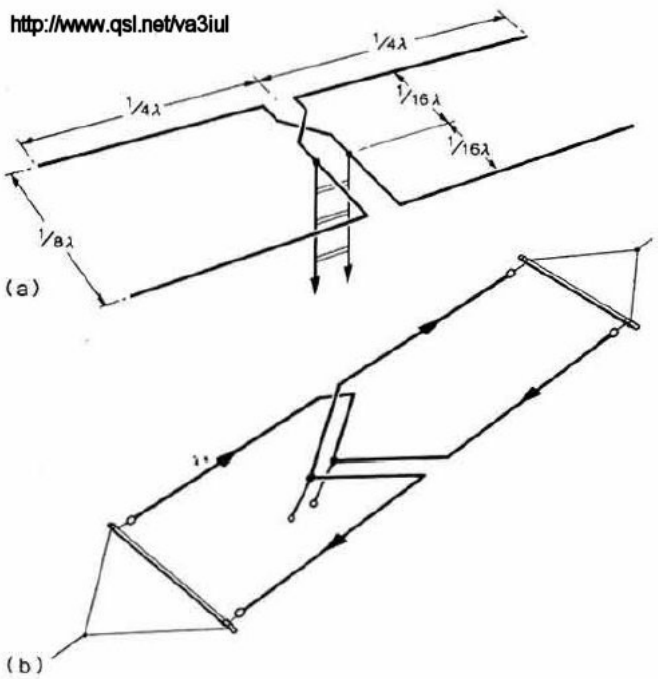

(a) Basic single-section centre-fed W8JK bidirectional array. With a 14MHz design frequency it should work well (and with some extra gain) at all frequencies to 28MHz. It consists of two closely-spaced dipoles fed out of phase. Spacing is non-critical but symmetry should be preserved and the array fed from balanced line through suitable atu. (b) W8JK implemented in wire form as fixed array, but note that the low radiation resistance calls for good insulation and minimum coupling off the ends into supports (use nylon or plastic rope etc rather than support wires)

331 - High Gain Rhombic Antenna for 70cm

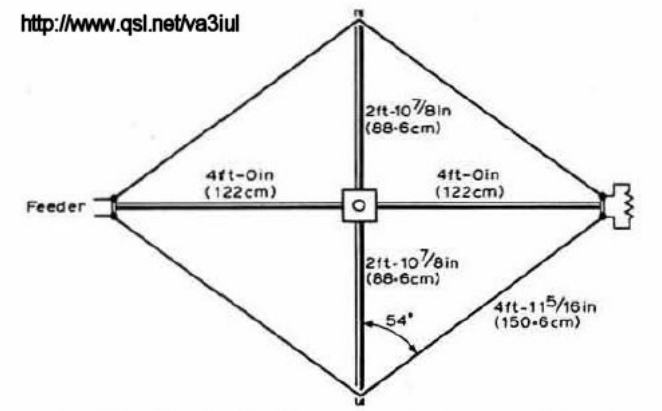

N3AWE's 432MHz rhombic antenna only 8ft in overall length yet capable of gains of the order of 18dB. Terminating and input impedances about 300Ω

332 - Inverted Tree Delta Loop for 40m

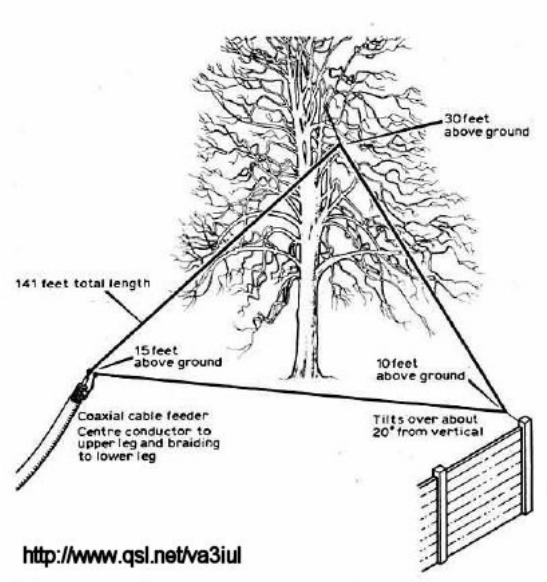

333 - Triangular Multiband Loop Antenna for 80m to 10m

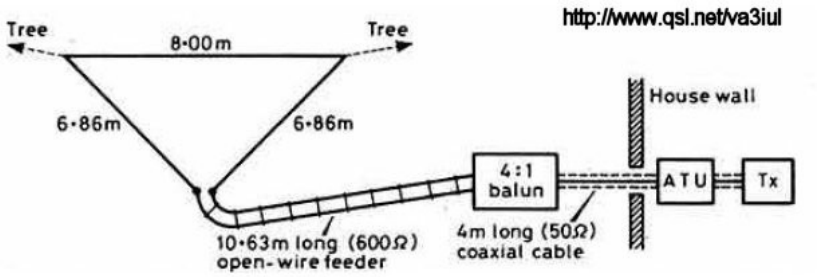

334 - T-Antenna with Sloping Elements for 40m,20m

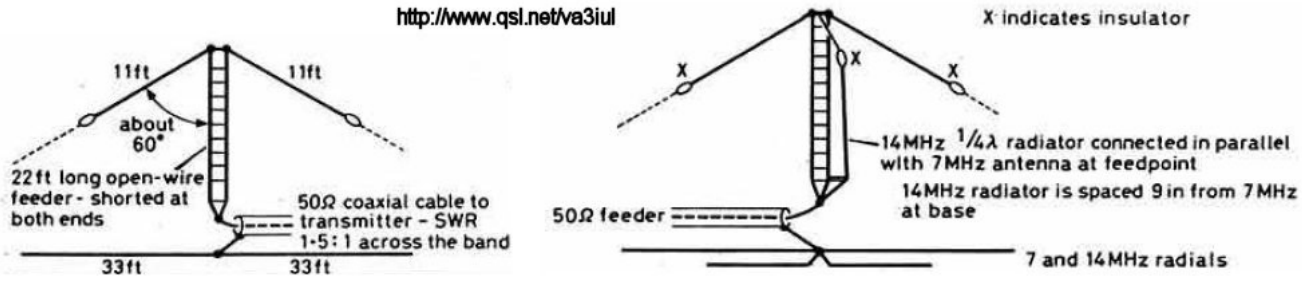

335 - Vertically Elongated Loop Antenna for 15m

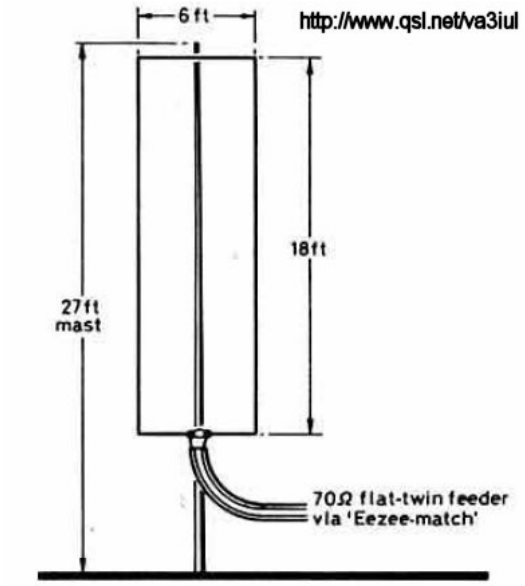

336 - Short Helical Wound Dipole for 15m

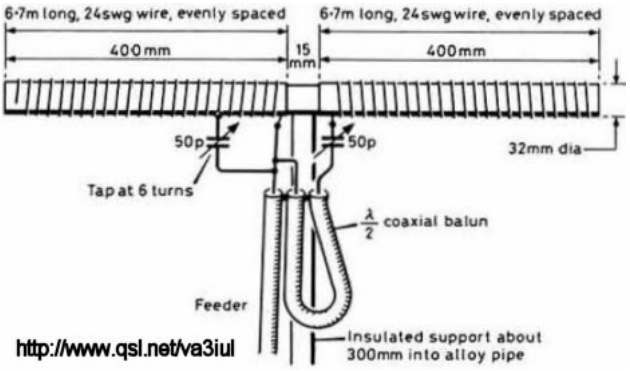

337 - Quadplane Antenna

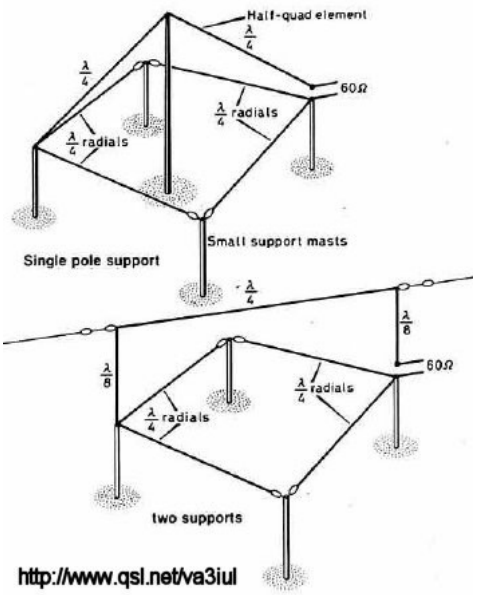

338 - Hibernating Directive Dipole for 20m

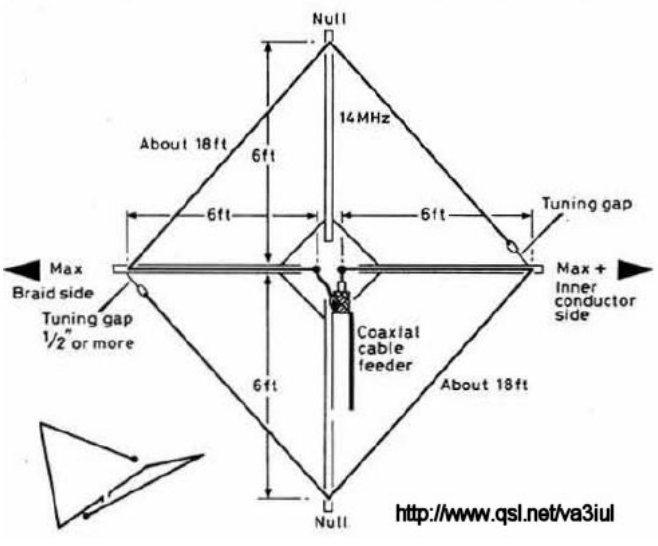

339 - H-Elongated V-Polarized Quadloop Antenna for 160m,80m,40m

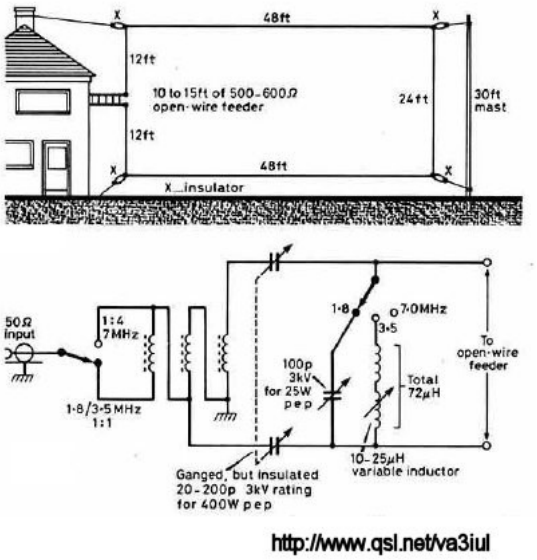

340 - Dual Band λ/4 Sloper Antenna for 80m,40m

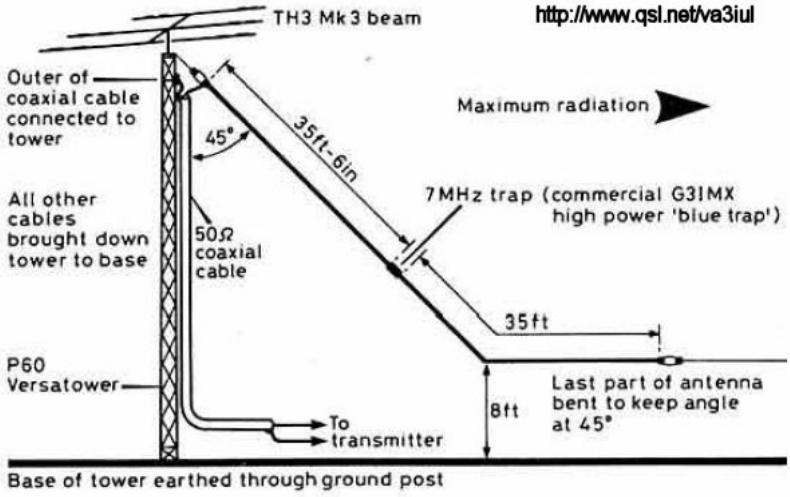

341 - Broadband Traveling-Wave Dipole for 80m to 10m

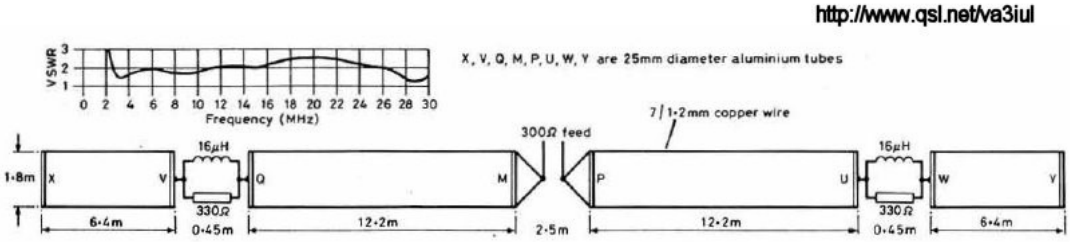

342 - Jaws Antenna for 40m

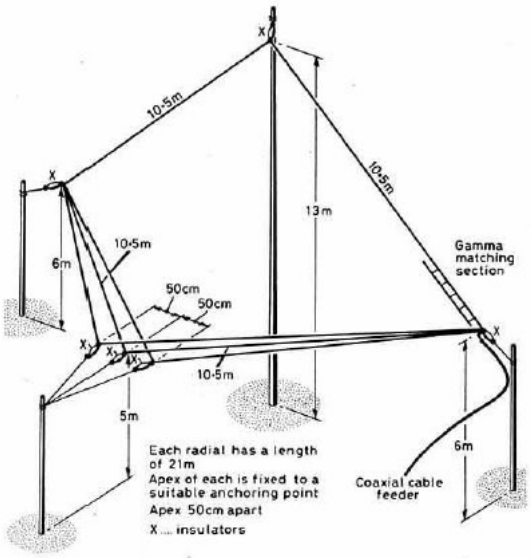

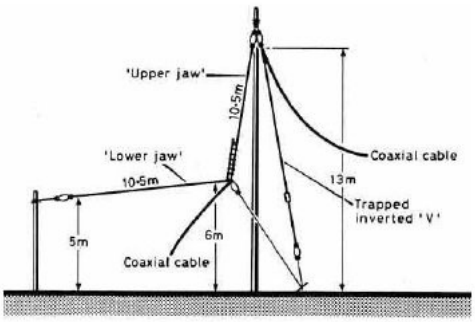

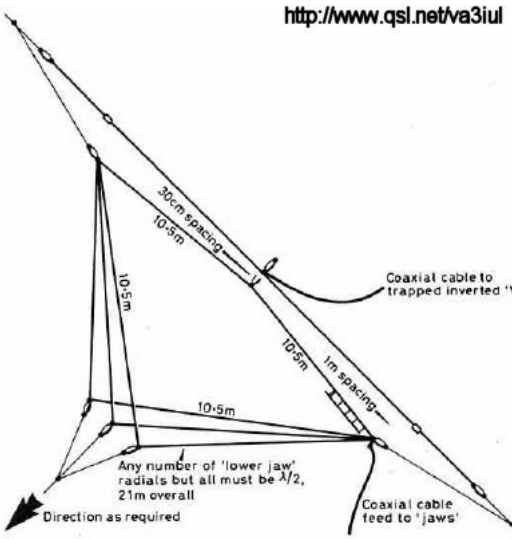

343 - Compact Double-D Antenna

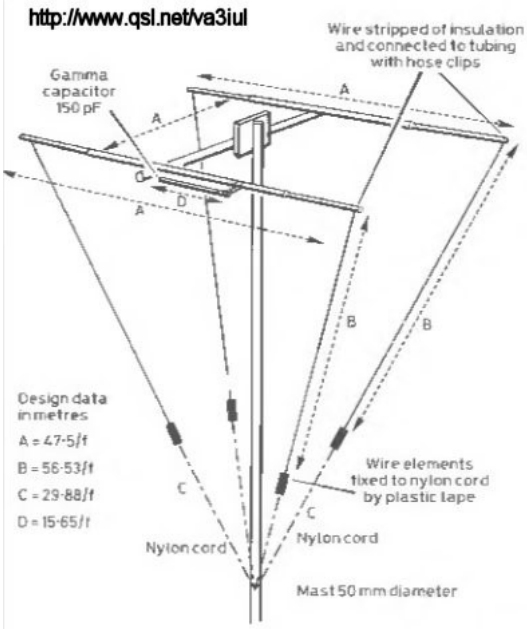

Compact Double-D approximate length data (in m; f in MHz): A=47.5/f, B=56.5/f, C=30/f, D=15.65/f.

---

344 - Portable Spiderbeam for 20m,15m,10m

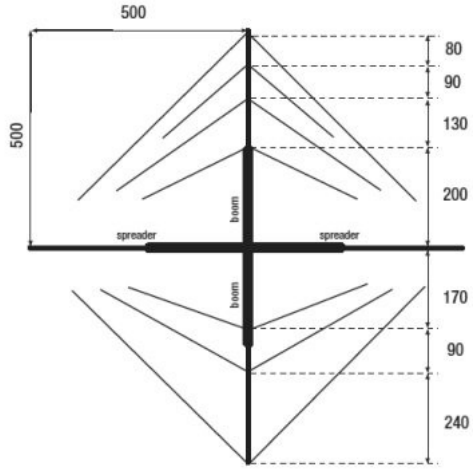

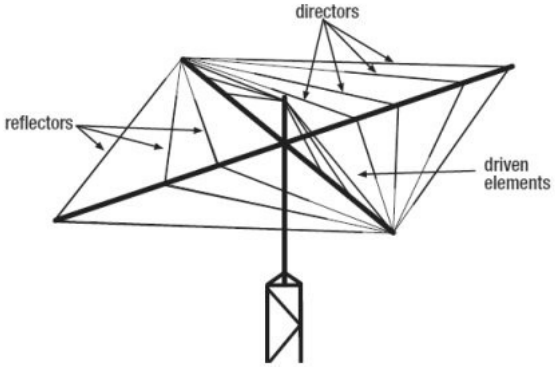

Band (m)	Reflector (cm)	Director 1 (cm)	Director 2 (cm)
20	1054	984	- - -
15	700	648	- - -
10	526	488	488

Band (m)	Driven element (cm)
20	2 x 502
15	2 x 347
10	2 x 262

Band	Forward gain in free space	F/S ratio (dB)	F/B ratio (dB)
20m	6.5 dBi (4.3 dBd)	12	15–20 across band
15m	6.6 dBi (4.4 dBd)	15	18–25 across band
10m	7.2 dBi (5.0 dBd)	18	20–30 across band

http://www.qsl.net/va3iul

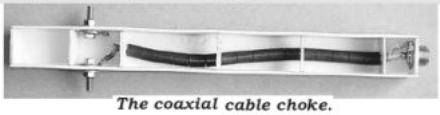

The coaxial cable choke.

---

345 - All Bands Cone Antenna

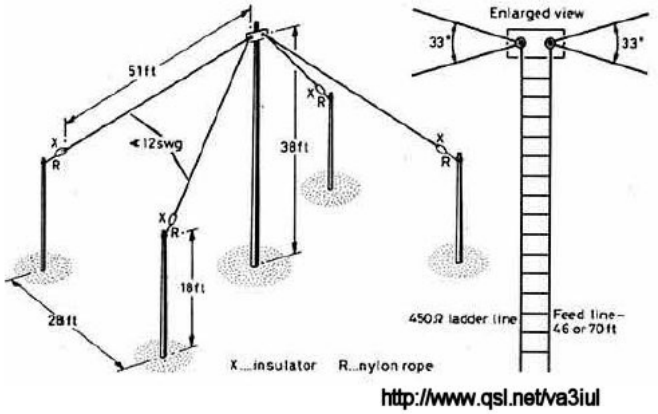

346 - Modified G5RV Antenna for 160m

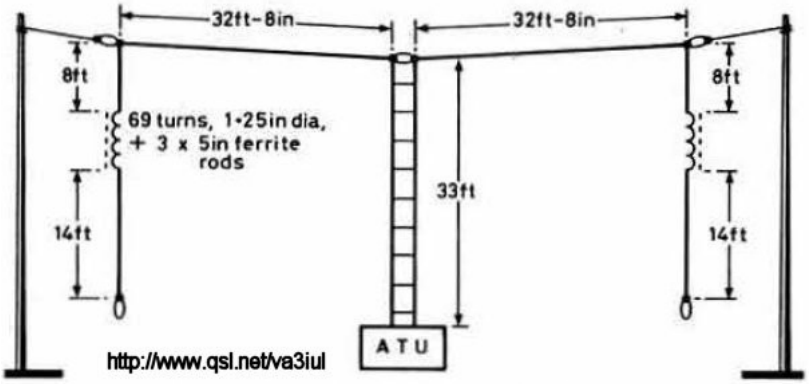

347 - Vertically Polarized Multiband Antenna for 160m,80m,40m

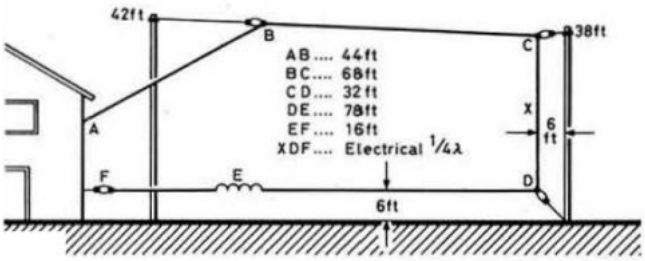

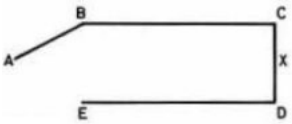

	A—B (ft)	B—C D—E (ft)	C—D (ft)	Pole (ft)
1·8MHz *	44	84	30	38
3·5MHz	14	52	28	36
7·0MHz	14	27	12	18
1·8MHz	44	116	33	38

* Loaded with coil and 11ft of wire beyond E

http://www.qsl.net/va3iul

348 - Half-Trap DX Antenna for 80m,40m

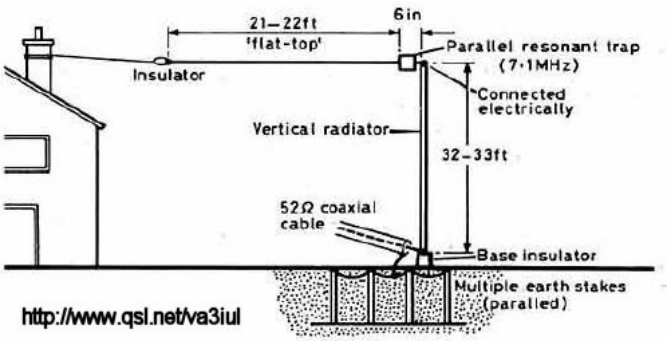

349 - WARC Bands Trapped Dipole for 80m,40m,30m,17m,12m

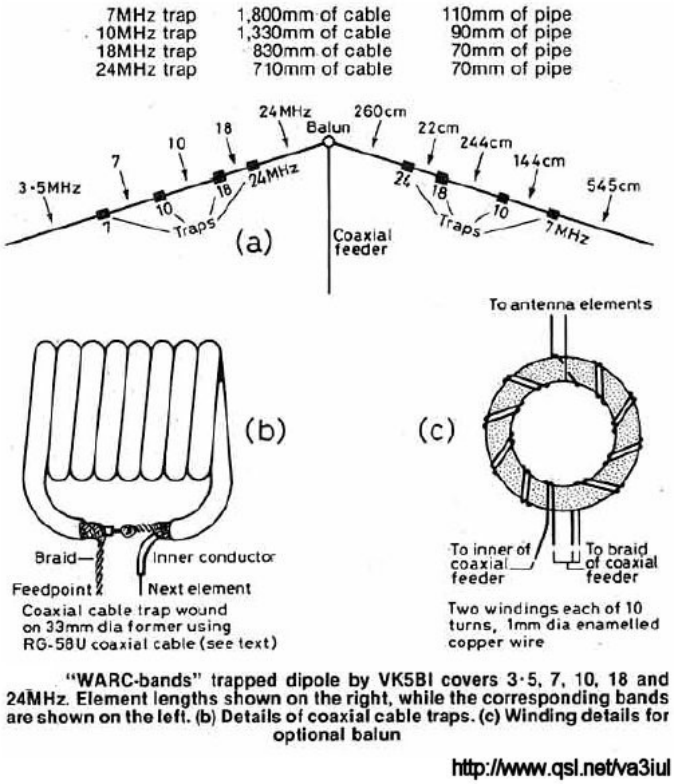

"WARC-bands" trapped dipole by VK5BI covers 3·5, 7, 10, 18 and 24MHz. Element lengths shown on the right, while the corresponding bands are shown on the left. (b) Details of coaxial cable traps. (c) Winding details for optional balun

http://www.qsl.net/va3iul

---

350 - T2FD Short Dipole Antenna for 80m,40m,20m

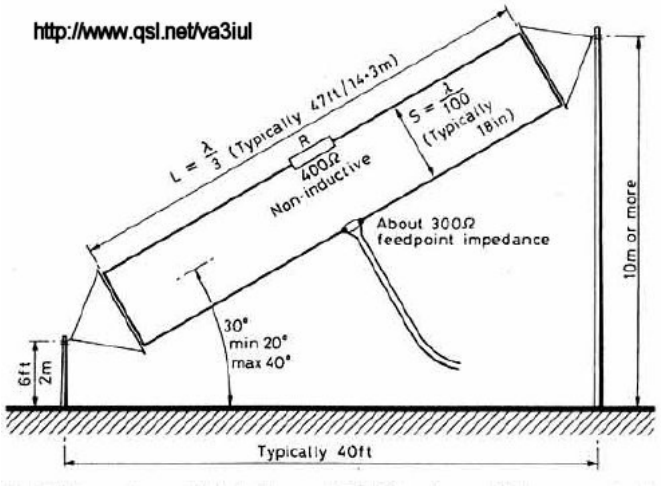

---

351 - Half Delta Loop Antenna VE2CV for 160m

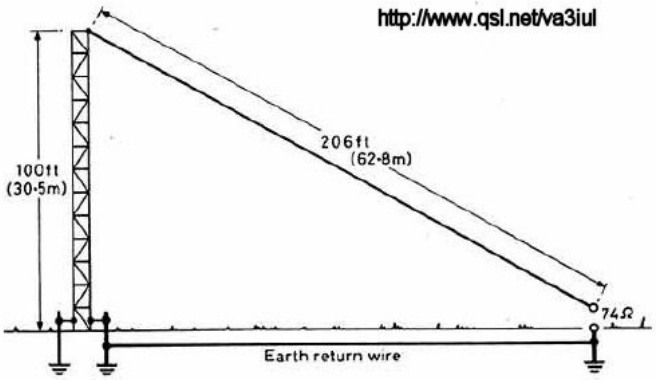

---

352 - Grounded End-Fed Wire Antenna for 160m

http://www.qsl.net/va3iul

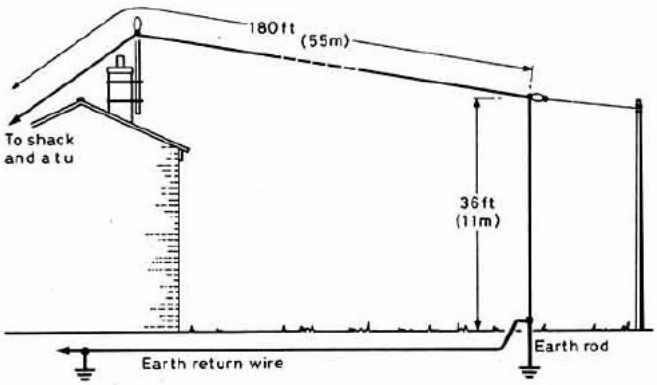

The grounded end-fed wire antenna system derived from the half delta

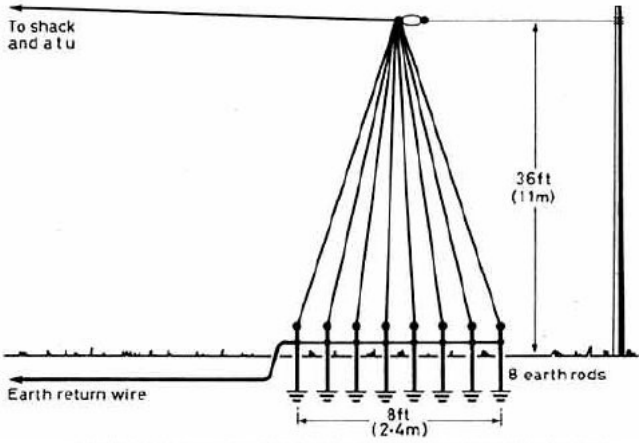

An improved grounded system using the multi-wire "steeple"

---

353 - Folded Dipole Coax Feeding

(Lamda / 2) x Velocity Factor

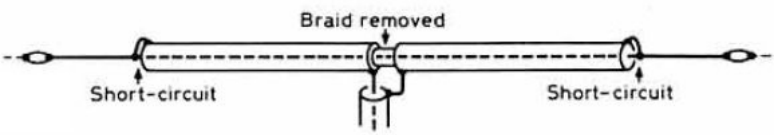

MATERIAL	DIELECTRIC CONSTANT	VELOCITY FACTOR
Polyethylene	2.3	0.659
Foam polyethylene	1.3 - 1.6	0.88 - 0.79
Solid PTFE	2.07	0.695

http://www.qsl.net/va3iul

---

354 - High Gain Rhombic Antenna

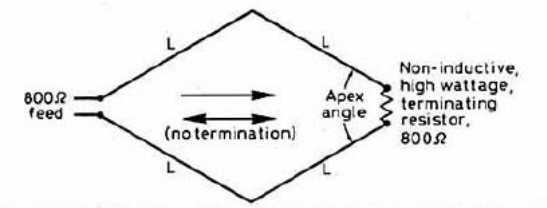

The classic rhombic antenna array providing a unidirectional beam when terminated or bidirectional when there is no terminating resistor. L is normally at least one-wavelength long at the lowest operating frequency

Bandwidth of rhombic antennas versus apex angle

Apex angle	f_{max}/f_{min}	L/λ for 10dB gain at f_{min}
36°	5·3	1·82
38°	5·1	1·73
40°	4·9	1·67
42°	4·7	1·60
44°	4·5	1·53
46°	4·3	1·48
48°	4·0	1·42
50°	3·7	1·36

Note: Minimum operating frequency is arbitrarily defined as the frequency at which the free-space gain is 4dB (ie the gain over ground is up to 10dB). Maximum operating frequency is defined as the frequency of maximum gain.

http://www.qsl.net/va3iul

---

355 - Long Wire Antenna for 6m

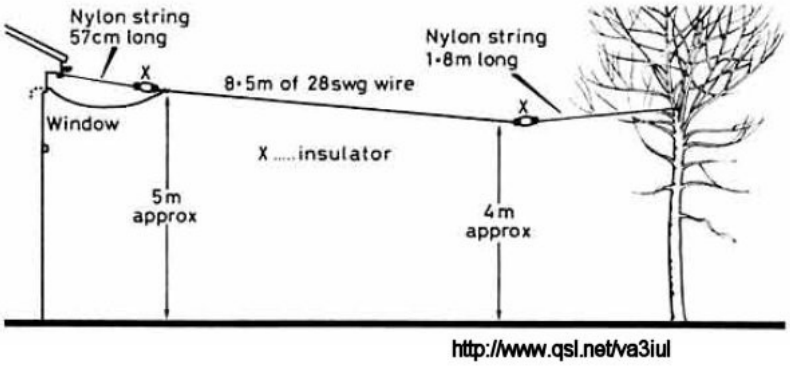

356 - Kite Antennas

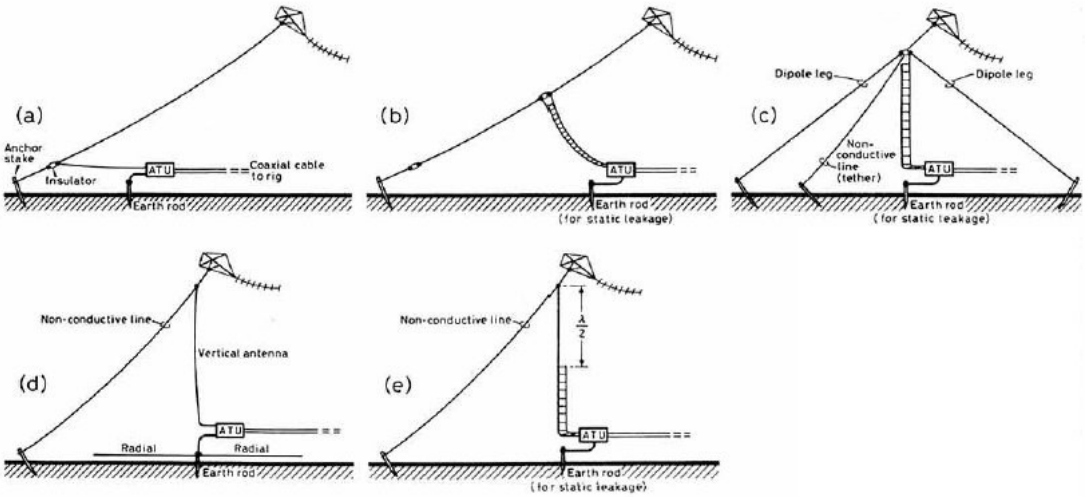

Some examples of kite antennas. (a) Simple wire tether antenna. (b) Sloping tether dipole. (c) Inverted-V. (d) Suspended vertical antenna. (e) Vertical Zepp

http://www.qsl.net/va3iul

357 - Multiband Windom with Balun for 80m to 10m

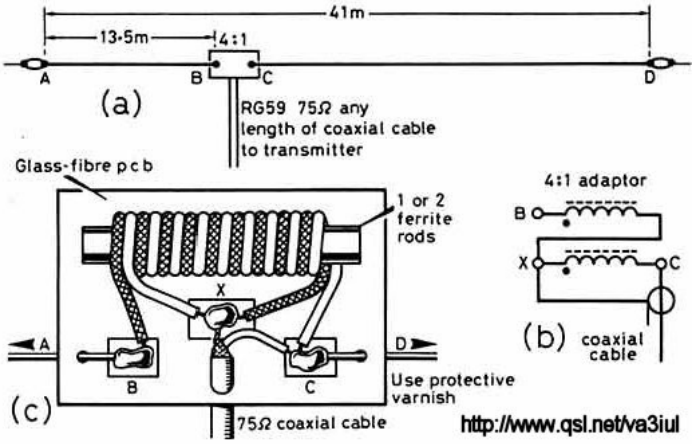

358 - Portable Collinear Antenna GM3LBX for 2m

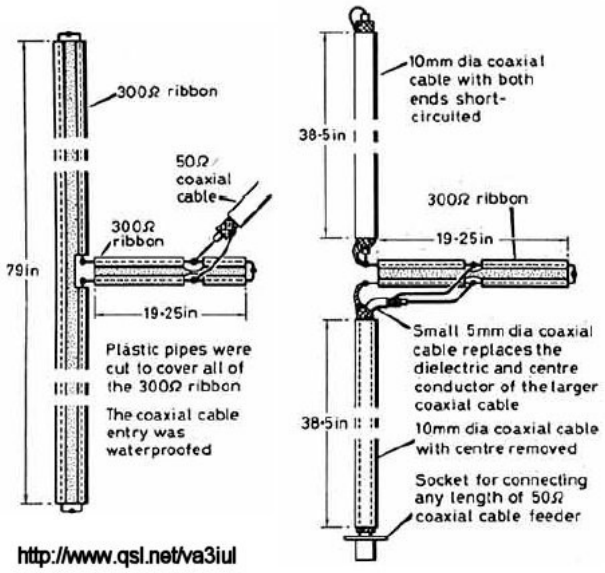

359 - Two-Elements Loaded Yagi for 20m

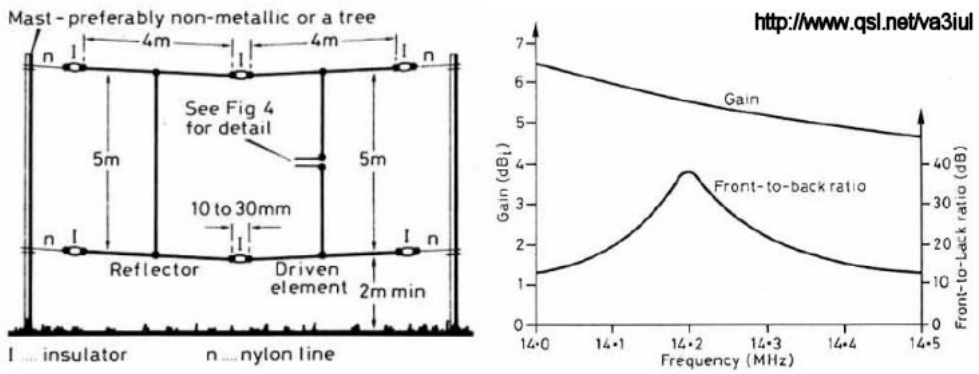

360 - Horizontal Plane TX Loop Antenna for 40m

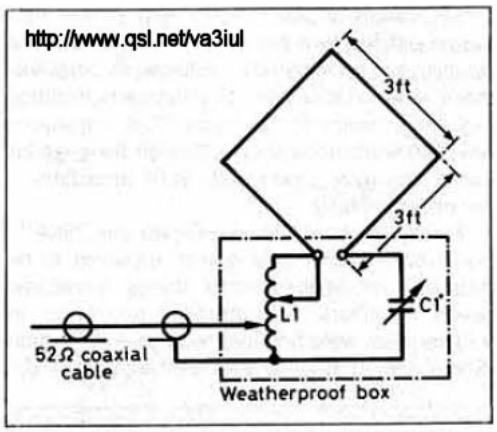

The 1952 horizontal-plane 'transmitting loop' of W4LW was simply connected in series with a conventionally tuned circuit. For a loop with 3ft sides at 7MHz, L1 had an inductance of 2.5μH and C1 a maximum capacitance of about 150pF (high-voltage spacing).

361 - Long Wire Antenna W3RW for 10m,6m

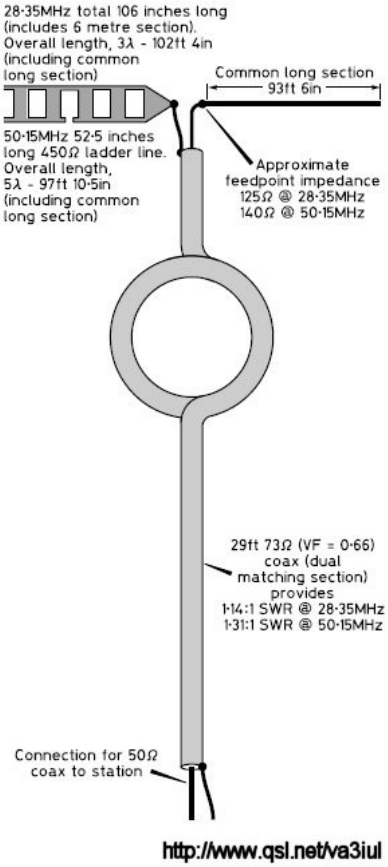

---

362 - Tri-Band Wire Beam VK2ABQ for 20m,15m,10m

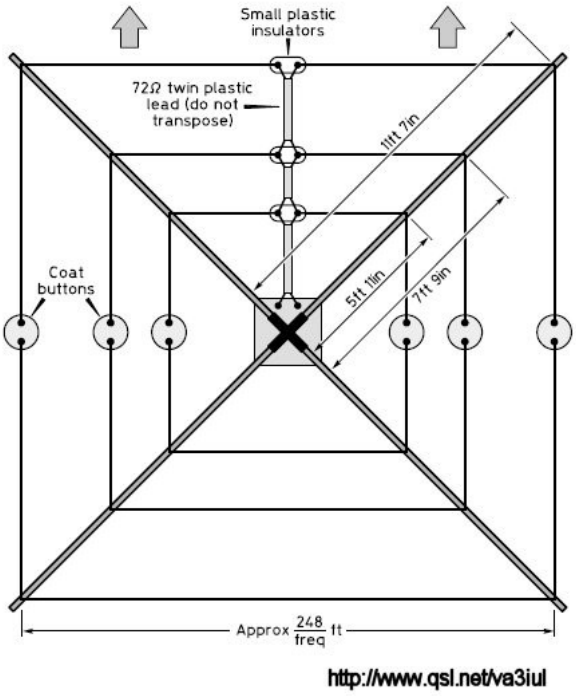

---

363 - Glen Forest Marconi Antenna for 80m,30m,17m,12m

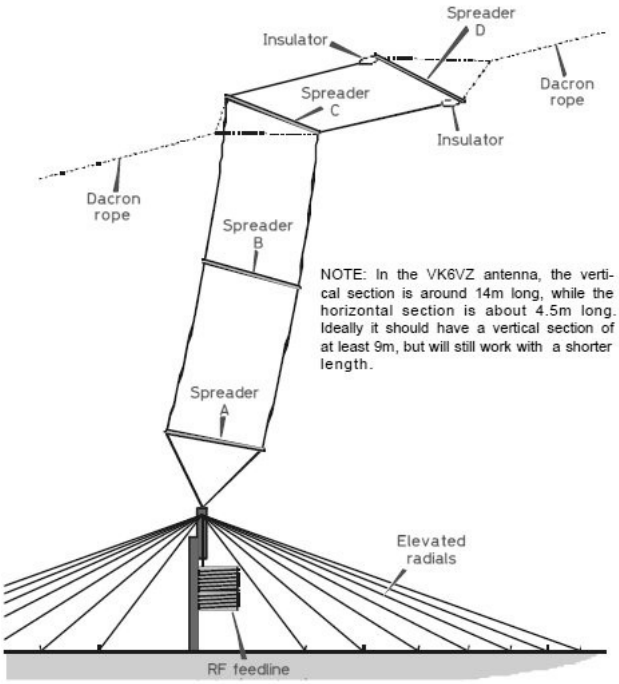

NOTE: In the VK6VZ antenna, the vertical section is around 14m long, while the horizontal section is about 4.5m long. Ideally it should have a vertical section of at least 9m, but will still work with a shorter length.

Four 1m-long pieces of 12mm-diameter wooden dowel are used to space the two parallel wires that make up the antenna - one close to the feedpoint, the second in the centre of the vertical section, the third at the top of the vertical section and the fourth close to the antenna's far end.

Over each end of the first three spacers are slid 10cm lengths of 'split' 10mm diameter PVC reticulation tubing, which serve as insulators. The fourth spacer has a plastic/nylon egg insulator attached at each end using a 5mm-thick cable tie, which serves to insulate the far ends of the antenna.

A 2.5-metre length of 1cm-diameter Dacron rope is attached to the ends of the far end antenna spacer (Spacer D), and the far-end antenna halyard is attached to the centre of the piece of Dacron rope.

The antenna is fed with a length of RG-213 50-ohm coaxial cable, via an RF feedline choke consisting of 20 turns of RG-213 cable wound on a 20cm diameter plastic former (made from an empty chlorine bucket). This choke helps to prevent feedline radiation, in particular on the 3.5MHz band. A more expensive alternative would be the use of ferrite beads at the feedpoint; however, no trace of series resonance has been found on the four bands.

http://www.qsl.net/va3iul

---

364 - Broadband Inverted-V Antenna for 80m to 10m

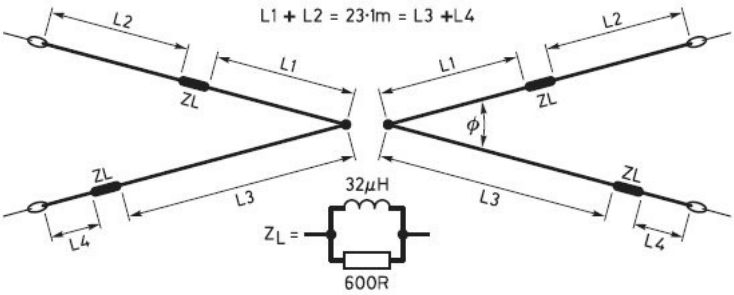

Broadband inverted-V form of HF antenna developed in South Africa covering 3 to 30MHz with good radiation efficiency when fed from 500Ω line. Unlike the Australian dipole no aluminium spacers are required. Key dimensions:

L1 + L2 = L3 + L4 = 23.1m

L1 = 13.5m (hence L2 = 9.6m)

L3 = 17m (hence L4 = 6.1m)

The included angle, ϕ, does not markedly affect the VSWR, but the feedpoint impedance is dependent to some extent, 5° optimum yields 500Ω, reducing to about 400Ω at near-zero spacing. A range of 3 to 30MHz with a VSWR of less than 2.5 can be achieved.

http://www.qsl.net/va3iul

---

365 - Broadband Terminated Delta Loop

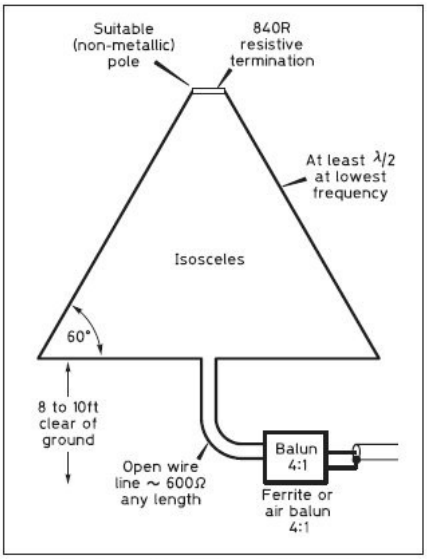

The broadband Terminated Delta Loop HF antenna with maximum radiation towards the zenith. The 840Ω resistive termination can comprise 24 2W resistors in four strings of six (each 560Ω) inside a 2in plastic pipe open at the ends (100W RF limit). Higher-rated termination needed for use with QRO linears. Termination value and balun match may be varied to optimise VSWR excursion over range of frequencies used.

---

366 - Skywire Loop Antenna for 80m,40m

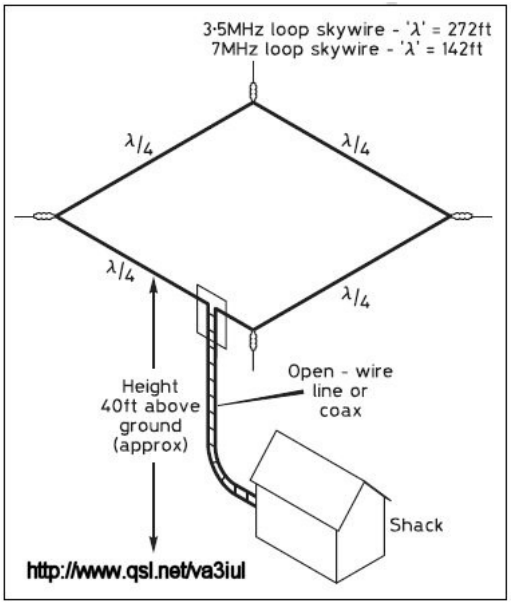

NT0Z advises: Put up the largest horizontal loop your site can support while keeping the 'loop' as square as possible. Don't worry about perfect symmetry [or resonance but try to preserve balance to earth –*G3VA*]. Loop could be scaled down for 14MHz and above.

---

367 - Rectangular Loop Antenna for 80m

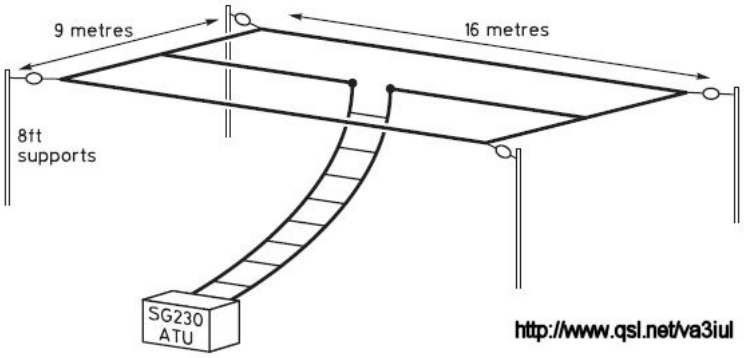

368 - Mini Delta Beam GM3VLB for 20m,17m,21m,13m,10m

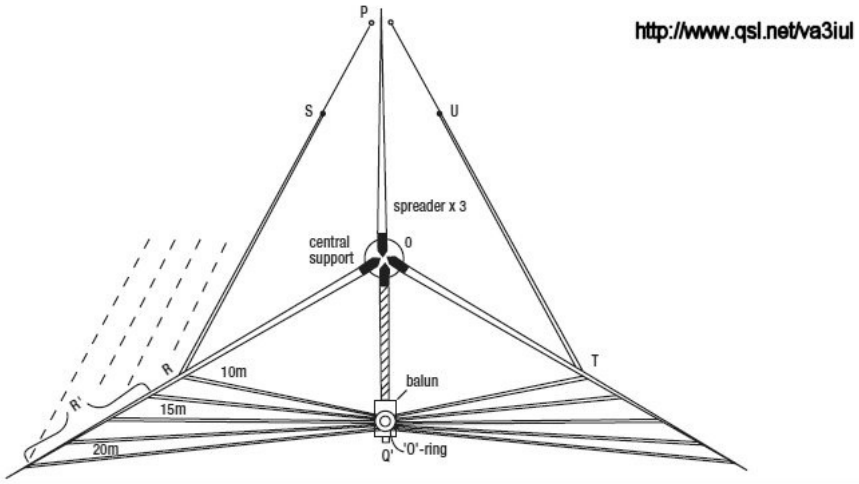

Design f (MHz)	QRS = QTU = 358/2f	QR = 504/6f	OR = QR/cos30°	Extra for fan-out	Q'R' (QR + extra bit)	SP = UP = 73/f	Extra 5/f to adjust f	SP' = UP' = 78/f
14.175	12' 7½" (+2")	5' 11" (+1")	6' 10"	1¼"	6' 1¼"	5' 1¾"	4"	5' 4¼"
18.110	9' 10½" (+2")	4' 7½" (+1")	5' 4¼"	¼"	4' 8¾"	4' 0½"	3½"	4' 2¼"
21.225	8' 5¼" (+2")	3' 11½" (+1")	4' 6¾"	0"	4' 0½"	3' 5¼"	3"	3' 7"
24.940	7' 2" (+2")	3' 4½" (+1")	3' 10½"	¼"	3' 5¾"	2' 11"	2½"	3' 0½"
28.300	6' 4" (+2")	2' 11½" (+1")	2' 5¼"	½"	3' 1 "	2' 7"	2"	2' 8¼"

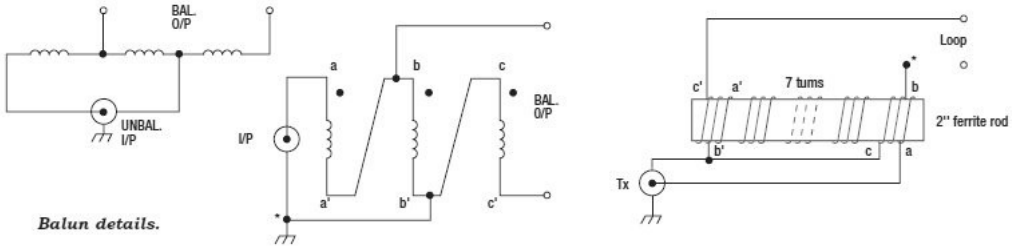

Balun details.

369 - End-Fed Inverted-Vee Beam

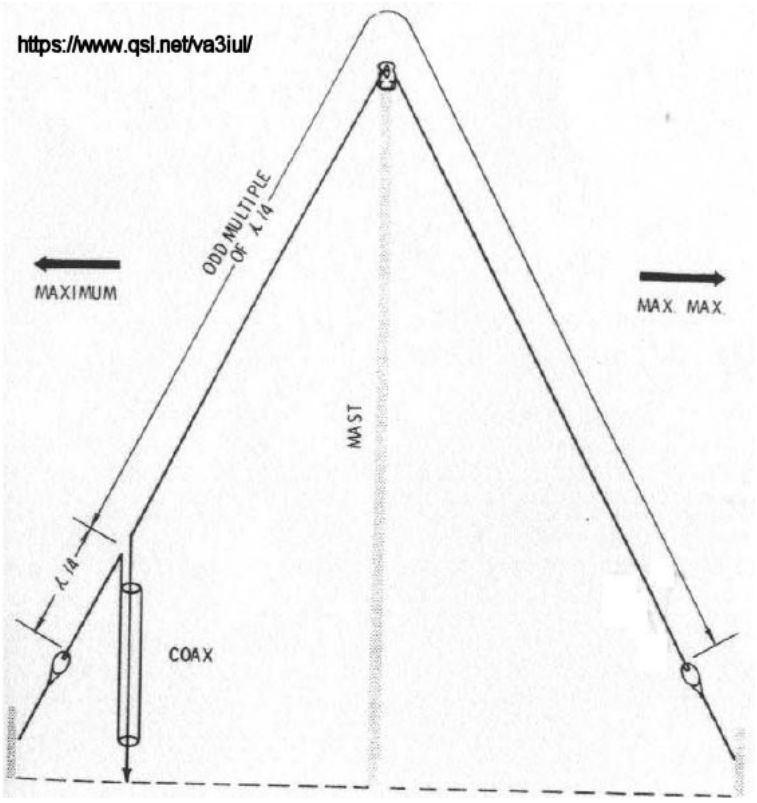

370 - Conical Vee with Balun for 40m,15m

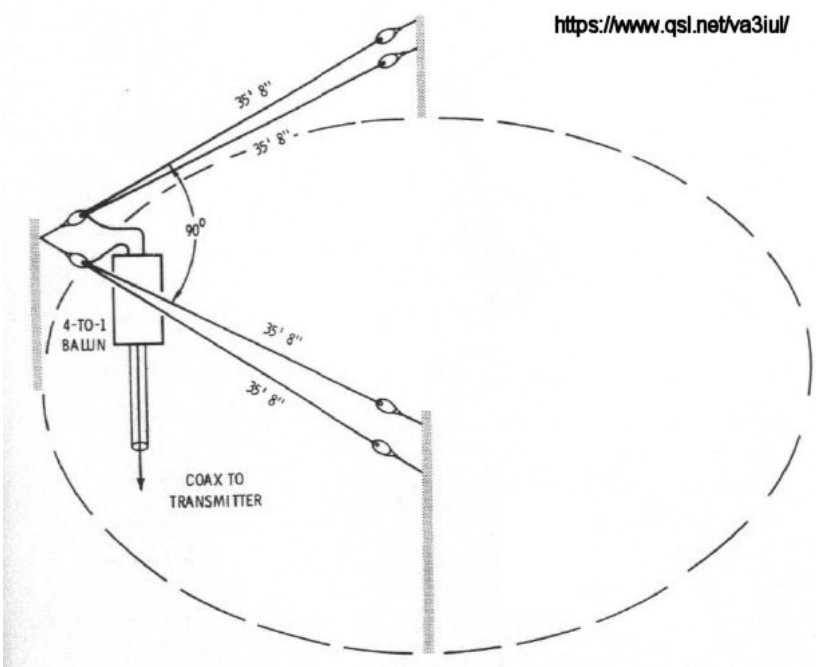

371 - Vertical Delta Loop Antenna for 160m,80m

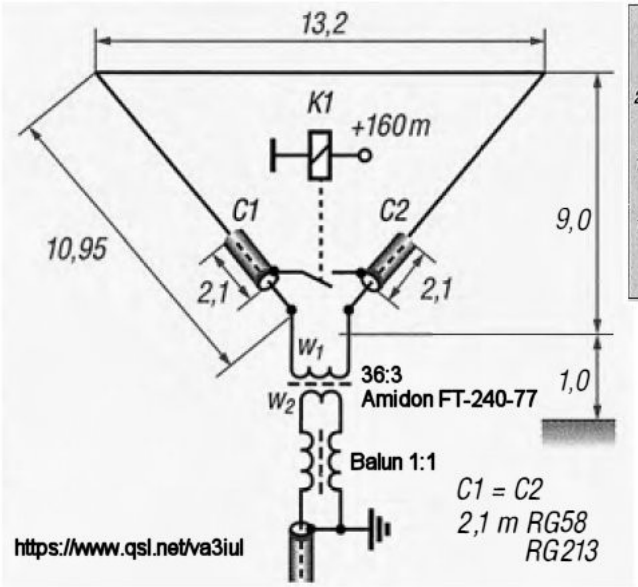

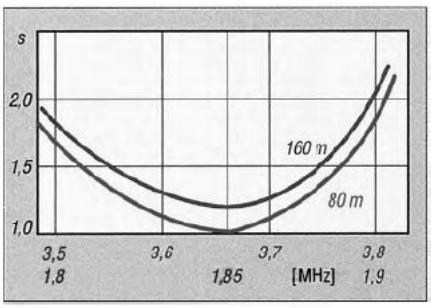

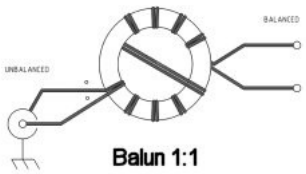

372 - Two Wire Resonant Rhombic Antenna for 20m,15,10m

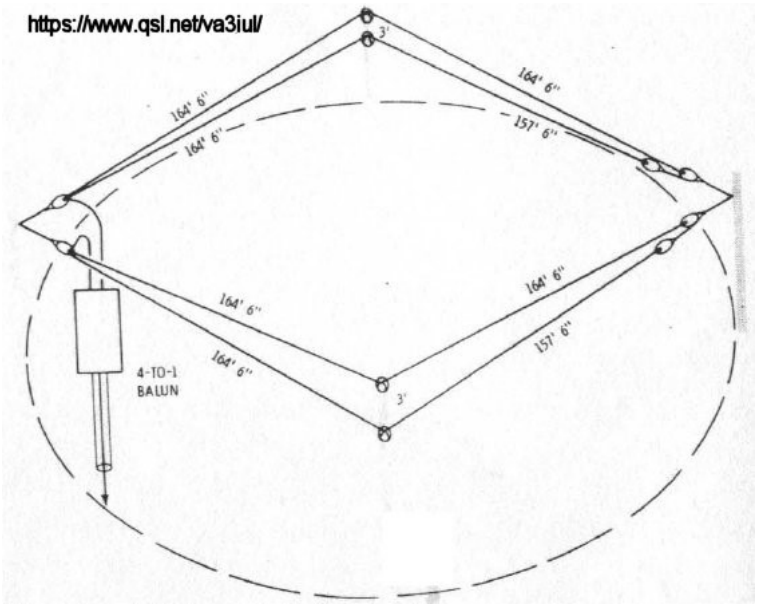

373 - Inverted-Vee with Parasitic Reflector for 40m

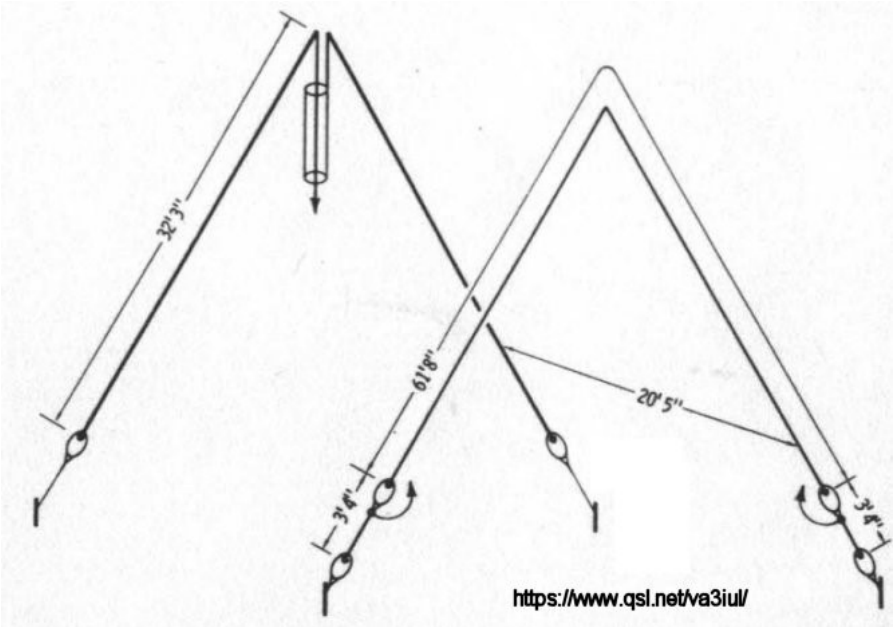

374 - Acute Angle Inverted-Vee Antenna for 160m to 10m

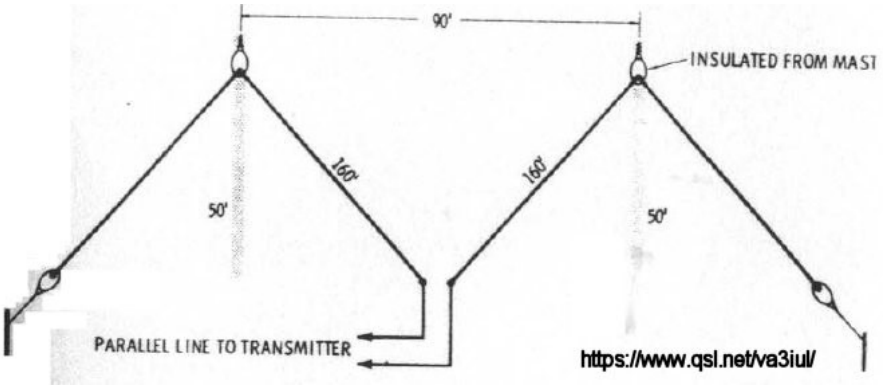

---

375 - Open-Wire End-Fire Beam for 15m,10m

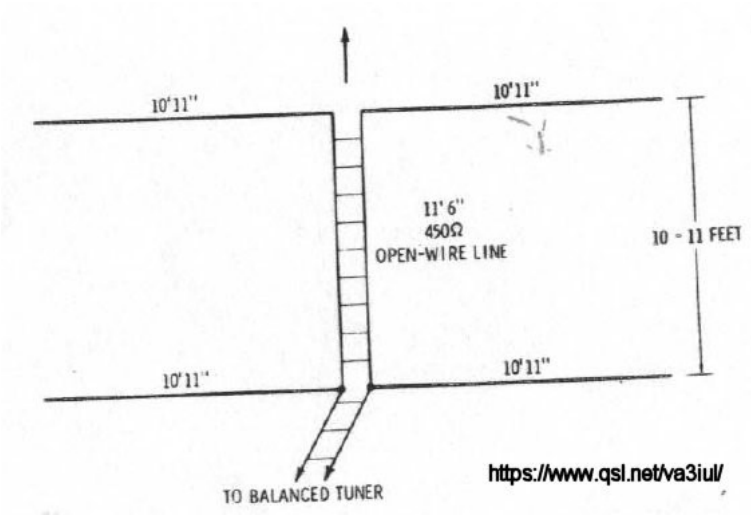

---

376 - Single Mast Two-Element Delta Loop for 40m

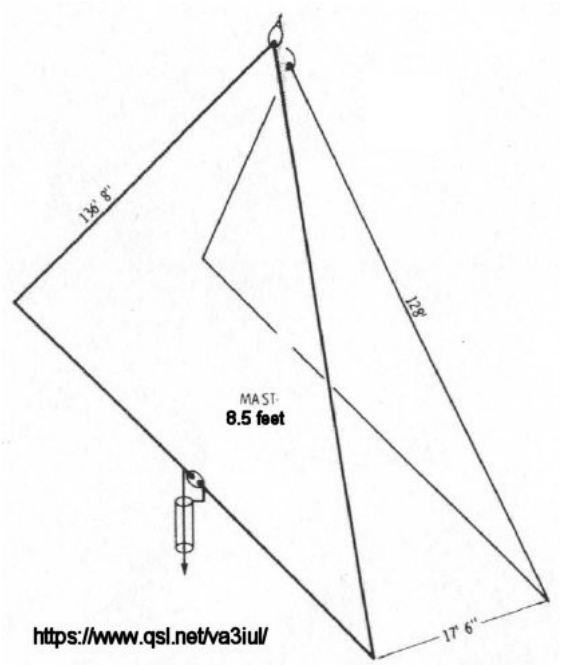

---

377 - Dual Band Turnstile Triangle Antenna for 80m,40m

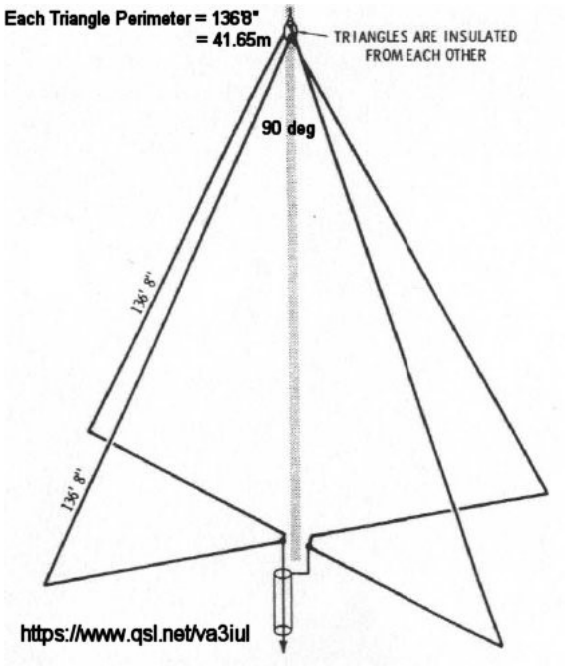

378 - Three-Band Short Antenna for 160m,80m,40m

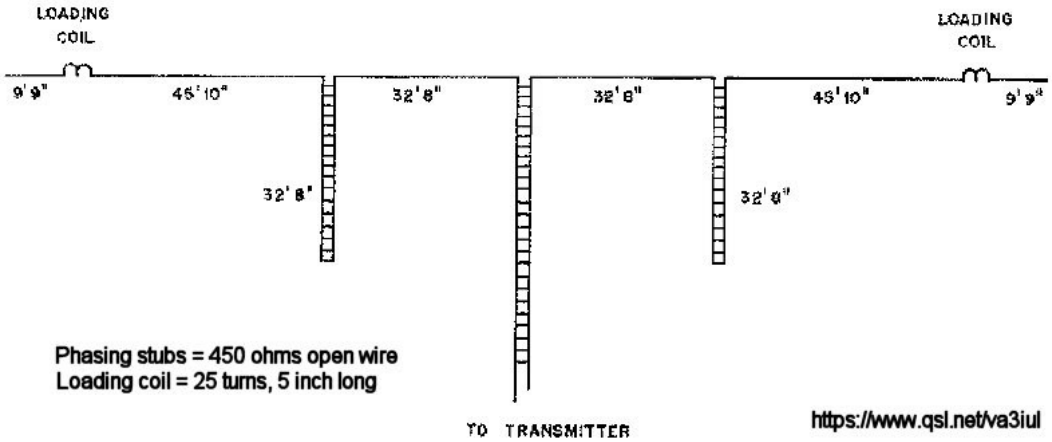

379 - Sloping-Vee Antenna for 80m to 6m

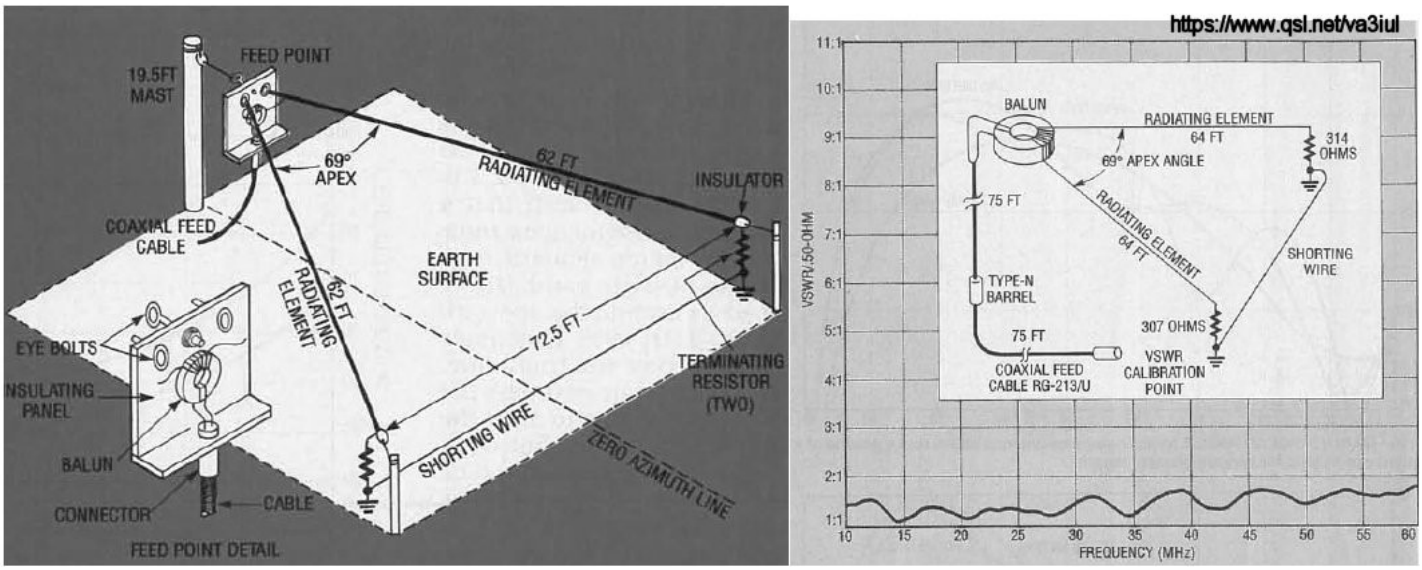

380 - Five DX Antennas for 30m

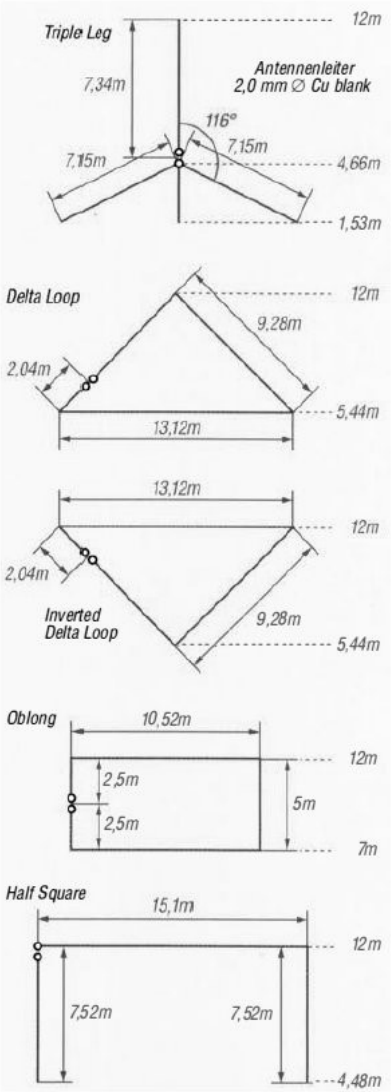

https://www.qsl.net/va3iul

---

381 - T-Ant for 160m,80m

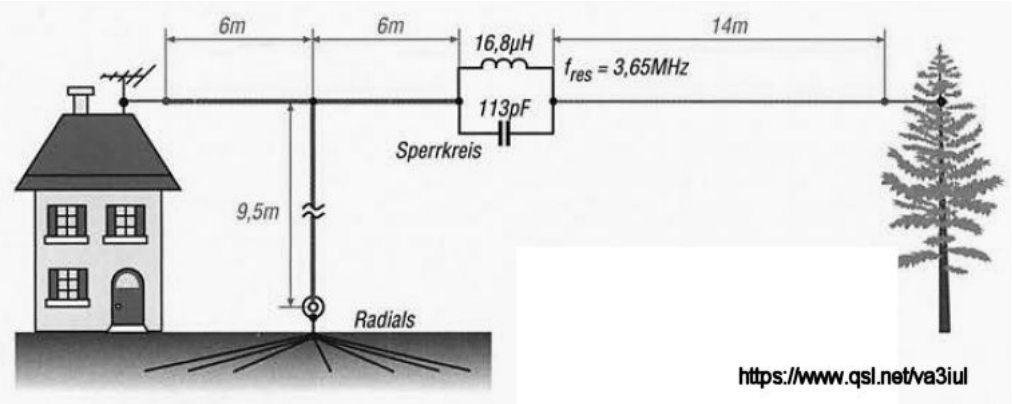

---

382 - L-Ant for 160m, 80m

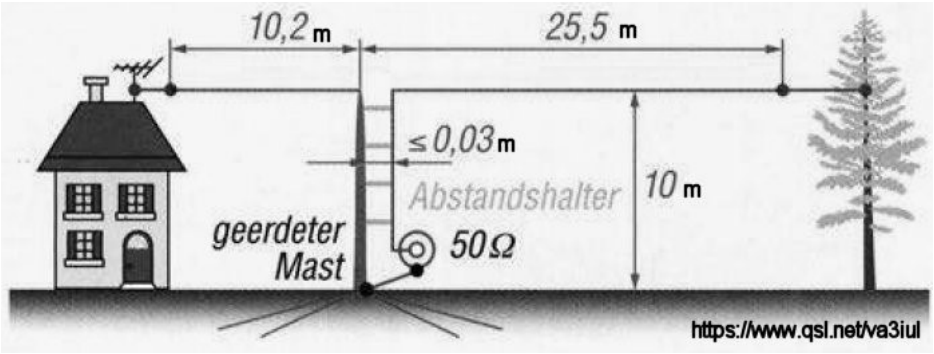

383 - Monoband Delta Loop for 40m

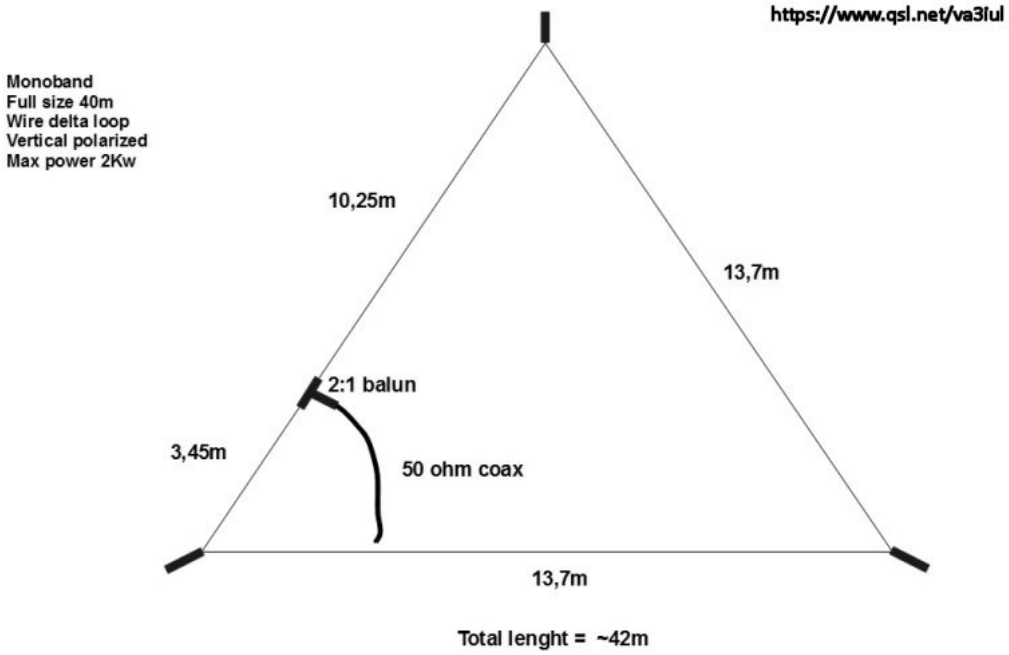

384 - Single-Band Wire Beam Antenna for 40m,20m,15m,10m

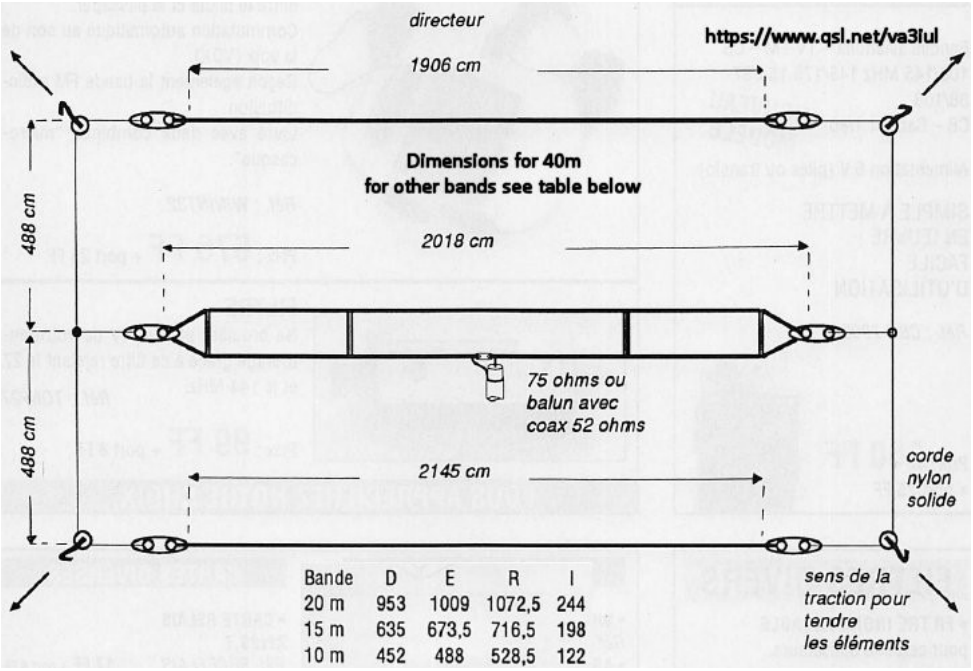

Bande	D	E	R	I
20 m	953	1009	1072,5	244
15 m	635	673,5	716,5	198
10 m	452	488	528,5	122

385 - Rhombic Beam Antenna for 80m, 40m

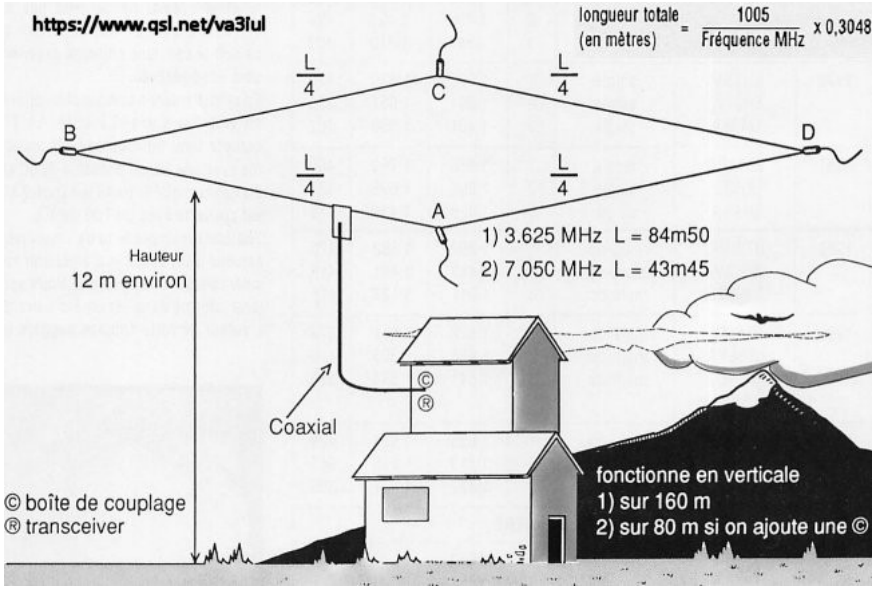

386 - Inverted-V Antenna for 80m, 40m, 30m

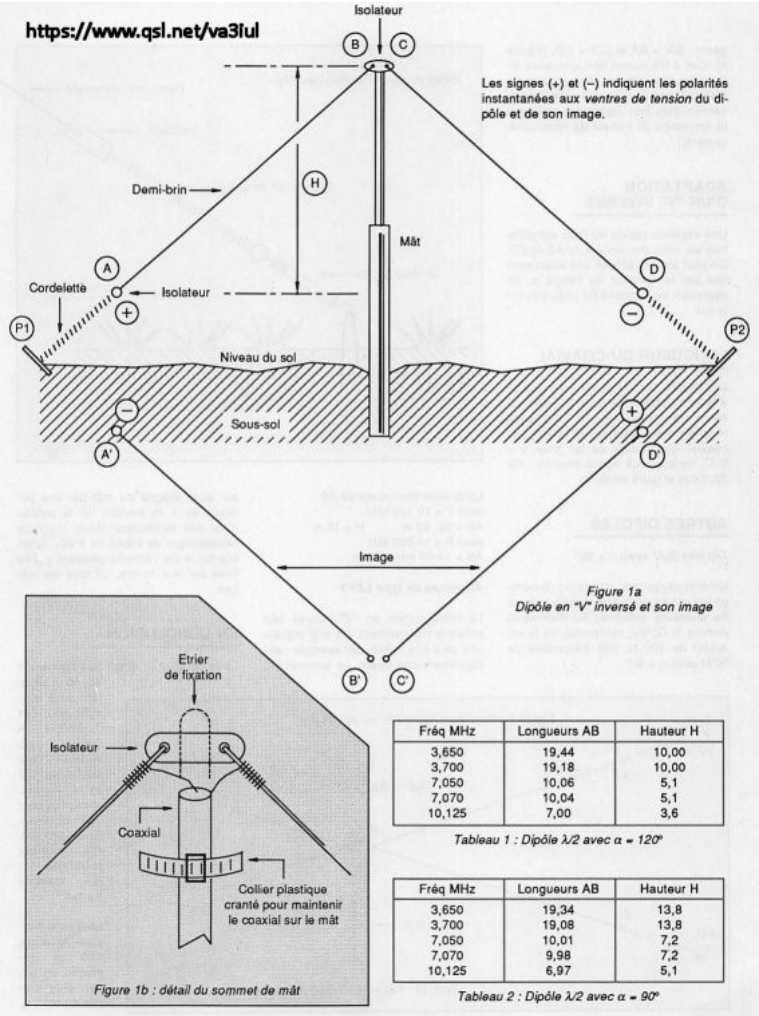

Figure 1a
Dipôle en "V" inversé et son image

Figure 1b : détail du sommet de mât

Fréq MHz	Longueurs AB	Hauteur H
3,650	19,44	10,00
3,700	19,18	10,00
7,050	10,06	5,1
7,070	10,04	5,1
10,125	7,00	3,6

Tableau 1 : Dipôle λ/2 avec α = 120°

Fréq MHz	Longueurs AB	Hauteur H
3,650	19,34	13,8
3,700	19,08	13,8
7,050	10,01	7,2
7,070	9,98	7,2
10,125	6,97	5,1

Tableau 2 : Dipôle λ/2 avec α = 90°

387 - Directive Delta Loop Antenna for 160m

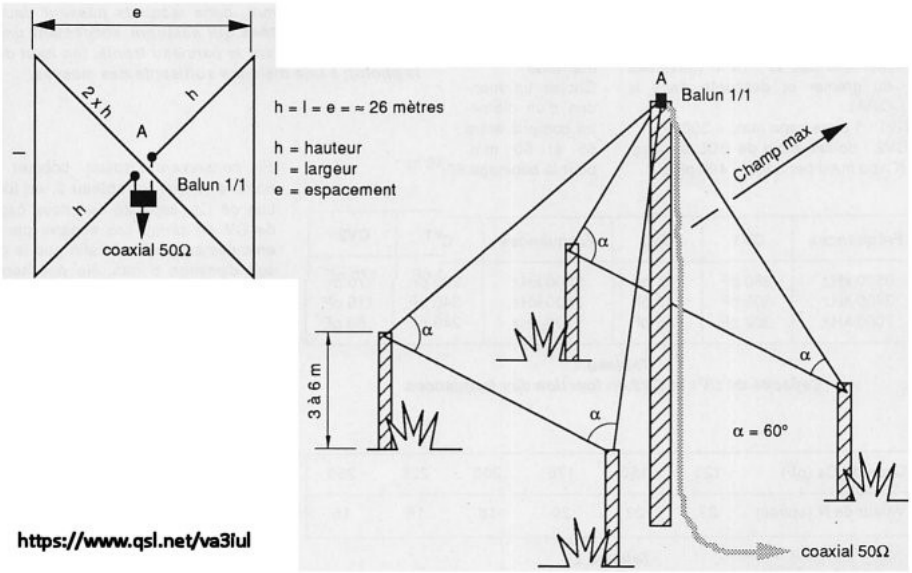

388 - Simple Sloper DXA Antenna for 160m to 40m

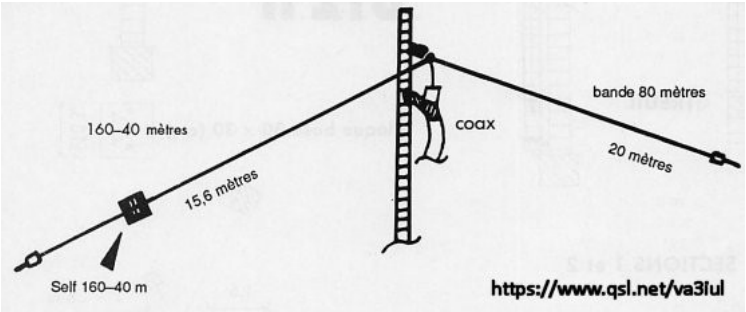

389 - 2x Element Delta Loop for 12m

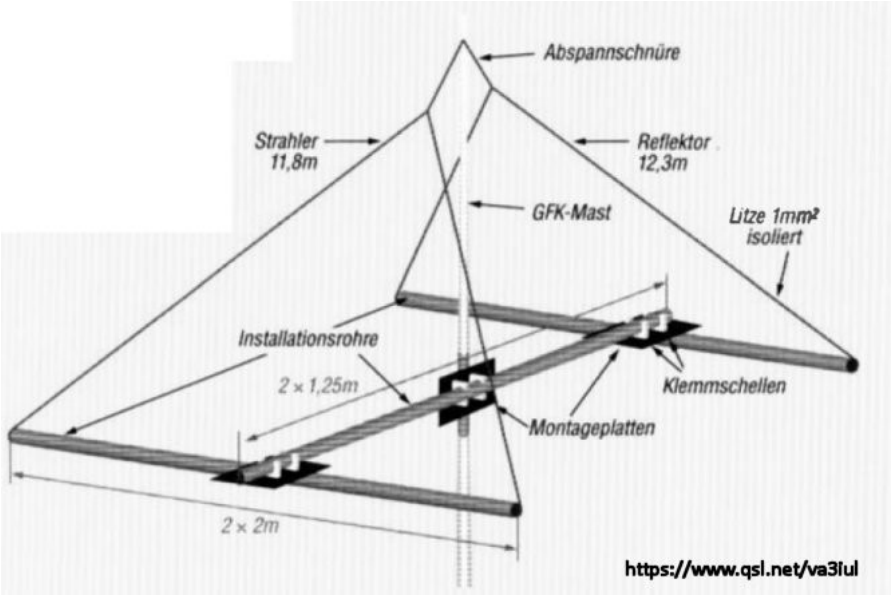

390 - Multiband Short Antenna for 40m to 10m

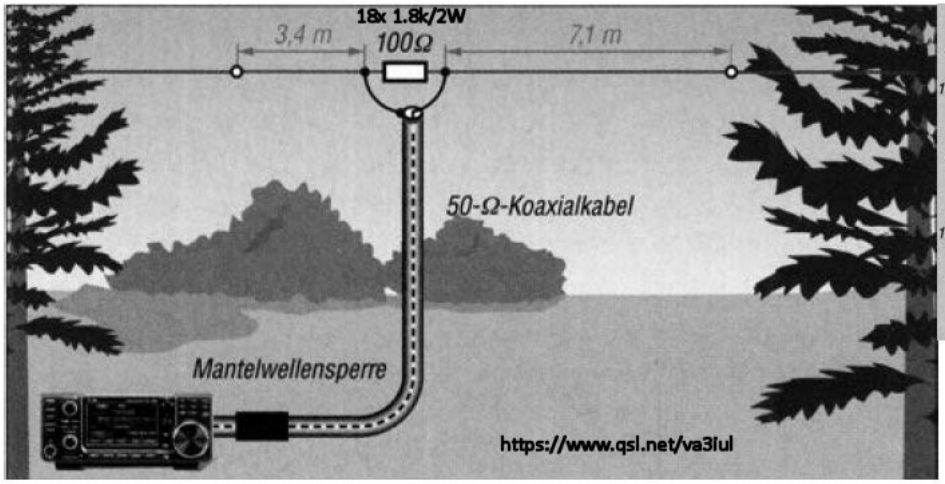

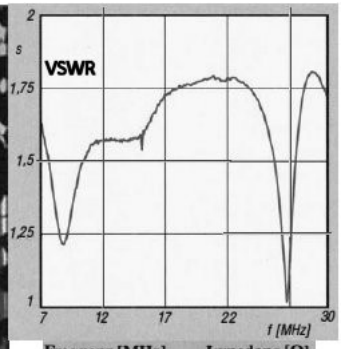

Frequenz [MHz]	Impedanz [Ω]
28,50	139 + j 38
24,90	174 – j 537
21,20	2195 – j 1930
18,10	581 + j 970
14,15	128 + j 34
10,10	52 – j 548
7,10	25 – j 1117

---

391 - Vertical Rhombic Antenna

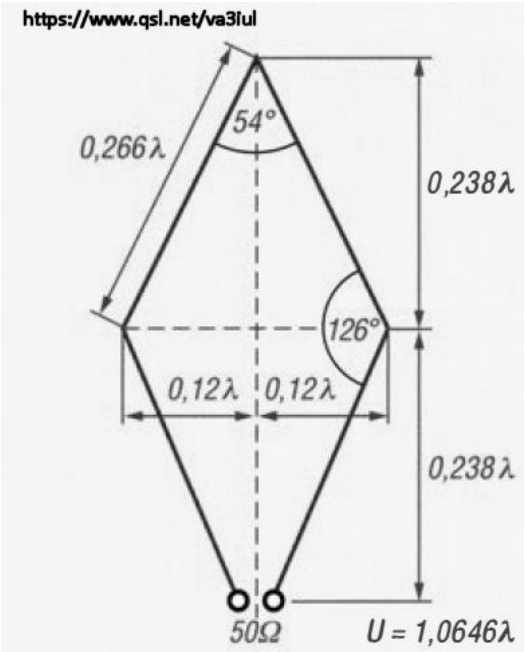

References:

Antenna Toolkit - J. Carr
Practical Antenna Handbook - J. Carr
More Antenna Classics - C. Hutchinson
Amateur Radio Techniques - P. Hawker
The Radio Handbook - W. Orr (editor), 15th edition
The Radio Antenna Handbook - Engineering Staff of "Radio"
Jones Antenna Handbook - Frank C. Jones
SM0DTK - http://www.sm0dtk.se/antennas.htm
ARRL Antenna Handbook 1990-2007
ARRL Handbook 1937-2009
ARRL Antenna Compendium
73 Magazine 1970-2002
Funkamateur Magazine 1990-2018
RSGB Handbook - 2007 - 2010
QST Magazine - 1980 - 2010
Ham Radio Magazine - 1969 - 1990
Radio-Electronics Magazine - 1986 - 1990
Radio Communication - Journal of RSGB - 1981 - 2017

home: ***http://www.qsl.net/va3iul***


Visitors
Image:NASA
FLAG counter